SUMO

GROWING WITH YOU

DTS & DD DRILL

Operator Manual

Sumo UK LTD, Redgates,
Melbourne, York YO42 4RG.

iPhone uses can use the camera to scan the the code while Android uses will need to download a QR code app.

Introduction

Thank you for purchasing your new Sumo machine. We at Sumo pride ourselves in our ability to produce compact, heavy duty and quality machinery. We hope you enjoy our products and that it helps improve your productivity in every way. For any further enquiries about additional products, optional extras or spares, please contact your local dealership/representative, or alternatively contact us directly using the contact details given on the cover page.

This Operators Manual is a comprehensive formulation of the directives and obligations necessary to be undertaken before and after any operation is performed, including maintenance and storage. It is important that each operator reads and understands this manual completely before trying to use the associated machine. This will reduce the chance of injury to both the user and persons around the machine, as well as reducing the likelihood of machine misuse which could result in parts failure and/or significantly reduce the service life of the machine. Sumo will not accept liability for any injuries or damage caused from negligence, use in extreme conditions, or failing to comply with the instructions within this manual.

These machines have been designed to take Sumo manufactured spares; non-genuine parts/accessories/modifications may damage the machine as they are untested and not recommended for use with the Sumo machine. Sumo will not honour warranty claims if deemed to be caused using non-genuine parts or accessories. Conversions of/ or modifications to the machine may only be carried out after consultation with Sumo.

As well as reading the instructions of operation contained within this manual, a trained technician or dealer should also instruct you on the correct and safe use of the machine and maintenance of the machine to ensure a long service life.

Training by Sumo is required for the following operations; loading for truck transportation, commissioning of new machines, advanced troubleshooting and repair. Any repair work to structural components of the machine must be carried out by Sumo or a workshop approved by Sumo, otherwise the warranty will be invalidated.

Please note, specifications, descriptions and illustrations in this manual are accurate, at the time of publication but may be subject to change. If you notice any discrepancy and are in need of clarification, please contact us using the details given previously.

Contents

1. Safety

The following warnings and safety instructions apply to all sections of these operating manual and should be read/considered in conjunction. The machine has been designed and manufactured to meet all the relevant safety regulations. These regulations along with the instructions provided within this manual are designed to help minimise the risk of injury to yourself and others around the machine at all times. Failure to comply with the safety obligations herein can result in any claims for failed machines/components, warranty, or damages being made void.

Please read **ALL** these safety instructions prior to the use of the machine to prevent safety issues or potential machine damage through incorrect use.

The designations “left”, “right”, “front” and “rear” refer to the direction of travel, as seen in the direction of travel, as the operator is sat in the driving seat looking forward.

1.1 Qualification & Training

Use of the machine by untrained operators can lead to injury or even death. To prevent accidents occurring ensure that operators have been trained by a Sumo dealer or technician. The following requirements must be met:

- Personnel must be of statutory minimum age in the country of operation.
- Ensure only reliable, authorised persons operate or work on the maintenance of the machine.
- Employ only trained or instructed staff; the individual responsibilities of the personnel concerning operation, setting up, maintenance and repair must be clearly established.
- Persons undergoing training or instruction or taking part in a general training course should not be allowed to work on or with the machine unless they are under the constant supervision of an experienced person.
- The person has read and understood these instructions in full.
- The person is fully competent/legally licensed in operating the machine towing the equipment.
- All Local traffic laws are understood and abided by.
- A person being instructed on the use of the machine must be done so under the instruction of a trained individual.

It is the sole responsibility of the owner of the machine to ensure all requirements are met by any individual intended to use/maintain/repair/transport the machine, including official training by an authorised trainer, having read and understood this manual in full, their area of responsibility, and Local Laws, Legislation & Regulations Standards.

Training by Sumo is required for the following operations; loading for truck transportation, commissioning of new machines, advanced troubleshooting and repair.

Any repair work to structural components of the machine must be carried out by Sumo or a workshop approved by Sumo, otherwise the warranty will be invalidated.

1.2 General Safety

It is the responsibility of the owner/user to ensure a safe working environment, not only for themselves, but those around them. The following instructions are advised to help ensure this is made possible.

Due to the nature of Sumo machines, the entire machine and surrounding area is classified as a **Danger Zone**, and the following instructions must be followed:

- Warning signs and other notices on the machine provide important information for safe operation. Observing and following them will serve your safety. Ensure they are clean, undamaged and clearly visible at all times.
- To avoid serious injury, ensure tractor keys are removed before making any adjustments or maintenance.
- With the drive still running/turned off, machine parts may fall, rotate or swing out. Ensure to stay clear of any risk area.
- Never allow anyone to stand, beside or behind the stationary machine, or whilst attached to a tractor, unless it is fully secured against rolling away by means of parking brake and/or wheel chocks. Even then all safety precautions herein must be followed.
- Before starting work, make yourself familiar with all the equipment and controls as well as their functions.
- The user should wear all necessary PPE as described in the PPE section of this manual.
- Adhere to all maintenance instructions given within this manual.
- Avoid any finger traps.
- Keep the machine and the bearings clean to avoid risk of fire.
- Maintain the upkeep of any electronics. Defective, incorrectly fastened electric lines, exposed wires can cause electric shocks.
- Always remain vigilant around the machine as hydraulically raised machine parts can lower slowly and unnoticed.
- It is expressly **Forbidden** for anyone to ride on our machines at any time.
- Never stand under the machine or lifted loads. Lower to the ground first.
- Machines should never be parked, folded or unfolded, or accessed in the presence of overhead power lines or pylons to ensure no flashover is possible. Special care should also be taken when manoeuvring nearby, folding or unfolding to ensure no contact is made.
- Instruct persons to leave the danger zone around the machine and tractor.
- Before working in the danger zone of the machine or between machine and tractor: **Shut down the tractor!** This also applies for short-term inspection work. Many accidents happen because of carelessness and running machines!
- Accidental operation of the hydraulic system can trigger dangerous movements of the machine.

- Failing to pay attention to the danger zone can result in severe or even fatal physical injuries.
- Check around the machine before moving off or starting up (Watch out for children or animals!). Make sure you have adequate all-round visibility.
- Always match your speed to the local conditions. Avoid any sudden acceleration or turning manoeuvres when driving uphill or downhill or when travelling across a slope.
- Consider the length, the wide overhang, the folded height and the sideways force acting on the machine when turning or negotiating curves.
- Ensure all transportation guidelines are followed within this manual.
- Ensure Sumo machines are only used for their intended use as outlined in this manual.

Young persons are less able to react to danger and are unlikely to have enough experience to react to situations and therefore should be kept well clear of the operating zone of the machine. Children should **Not** be left in/on the tractor/machine even when the machine has been shut down as hydraulics can still be operated if they are a mechanical spool. The minimum age of children riding on agricultural equipment locally in the country of operation must be adhered to. Sumo does not permit **Anyone** to ride its machines at any point, trained or untrained.

1.3 Personal Protective Equipment (PPE)

To protect the user and persons surrounding the machine during operation/maintenance suitable PPE must be worn:

- Tight fitting clothes or overalls, ensuring no loose clothing is able to get caught in the machine while it is in operation, this includes long hair, which should be tied up or placed in a hair net.
- Suitable footwear, steel toe capped shoes/boots, especially during the lowering, detachment or adjustment of any machine/feature.
- Eye protection such as safety glasses or goggles during general usage and especially when changing wearing components as these may be under pressure and can release suddenly, and when working with hydraulic components as the pressure may not have been released properly and could release suddenly.
- Jewellery such as rings, necklaces, bracelets and watches should not be worn while operating/maintaining this machine as it can get caught and cause further injury.
- Suitable hand protection, specifically during adjustment, maintenance, and when attaching the machine to a tractor as hydraulic oil can cause injury if it is under pressure as it can pierce the skin and cause serious health problems if it enters the blood stream.

As a general rule, Sumo advise all PPE to be worn at all times, just to be safe.

1.4 Warning Symbols

Warning/Safety stickers have been positioned on the machine to warn of dangerous points and are an important part of the safety equipment of the machine. Missing safety stickers increase the risk of severe or even fatal physical injuries. It is crucial that all operators and spectators abide and understand them.

Before any operation, and a standard maintenance regime, ensure all warning/sticks are clean, undamaged and clearly visible.

The following is a general pictorial and description key for each warning/sticker typically used by Sumo. If there are any warning/stickers you are unsure of, or you think maybe be missing, either on the machine or in this manual, make sure to contact Sumo or a local dealership before taking any further action.

Warning/Safety Labels:

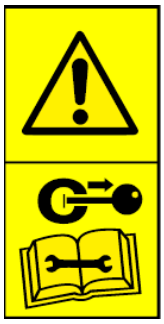

Stop Engine!

Consult Operation Manual Before Continuing.

Risk of falling.

No riding on machines

Risk of crush.

Stay clear of unfolding and/or swinging elements

Warning!

Ensure rear discs are in down and clear of tyres position before folding and unfolding (Applies to Disc

Never reach in to working parts. Risk of crush

Grease Daily.
Failure to do so may diminish the life service of the machine or cause

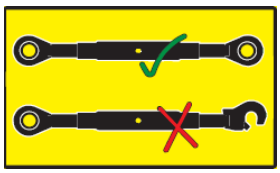

Closed top link only.
Do not use Open Top Link.

Never reach in to
working parts.
Risk of crush

Shear Pin Machines Only!

Advance new replacement shear pin
through two extra positions on this

Keep Fingers Clear!
Change leg depth from underneath.

Stay clear of machine while
manoeuvring, stationary but
unsupported, and/or working.

Caution!
Read manual carefully.

Warning!
Ensure stands are raised and safety link is removed before unfolding. Failure to do so will result in damage to the wings.

Warning!
Do not climb on steps when moving.

MUST ONLY BE DRIVEN ON HIGHWAY EMPTY

All Seeder Tanks must be transported empty to minimize laden masses.

Maximum fan pressure is 15 Bar

DTS/DD3 Hydraulic Coding Label

Trailed DTS/DD Hydraulic Coding Label

2. Product Summary & Machine Identification

This section of the manual is designed to outline the basic machine range summary's, intend use outline, and machine variants/identification. This information is accurate, as known, at the point of publication but is also subject to change at Sumo's discretion.

For a more detailed descriptions, specifications & technical details - see www.sumo1.com, or consult the correlating Machine Manual & Parts Book.

2.1 Summary Description

The following are brief summaries for each machine type, outlining the design concept and intended use.

DTS - The DTS is a versatile drilling system, giving the user the option to direct drill into stubble, minimum tillage or plough-based systems.

DD - The DD is an essential tool for zero-till crop establishment where seed placement is required with minimal soil disturbance.

2.2 Intended Use

Based off the Summary Descriptions previous, Sumo machines are intended to be used for normal soil cultivation in agricultural practices associated with those requirements only.

Any use outside of the intended use/summary description of the machine can lead to injury to persons operating or within the area of the machine and can also lead to the warranty being invalidating. Sumo accepts no liability for the actions or use of any operative not employed by Sumo UK Ltd.

Any faults with the machine should be rectified prior to use. Faults can cause safety issues and can also cause the machine to work in an unsatisfactory manner.

Only qualified persons, as outlined in the Qualifications and Training section of the manual, may operate this machine.

2.3 Machine Identification

The following is a blank picture of the serial plate attached to the front of every machine:

To identify your machine, find your serial plate and cross-reference the details with the Technical Data that follows.

Note: It is important when talking to a Sumo representative that you provide the year of manufacture in order to ensure clarity of the machine being discussed, as different years may have slight or major design variations.

2.4 Technical Data

The following collection of tables denote the different machines available in each range of Sumo products, and include the basic collection of technical data applicable to those machines. For a more detailed technical data, see the correlating Machine Manual & Parts Book.

Note: All dimensions hereafter are approximate and in metric. Length, width and height dimensions refer specifically to the machine whilst in its required transport positions, see Machine Manual & Part Books. All weights are based on standard machines without any additions, modifications or loads. All machines are subject to fabrication and assembly tolerances and could vary slightly from values given. Lengths and Height have been omitted from all Mounted machines as the value is entirely dependent on the connected tractor.

Machine Type Key:

Mounted = Machine mounted directly to a Tractor.

Rigid = Trailed Machine that does not fold.

Folding = Trailed/Mounted Machine that hydraulically folds.

DTS Range

Code	Machine Type	Working Width (m)	Length (m)	Width (m)	Height (m)	Weight (kg)
DTS3	Mounted	3	-	3	-	3280
DTS4	Folding	4	6.58	3	3.95	6600
DTS5	Folding	5	6.58	3	3.95	8061
DTS6	Folding	6	7.06	3	3.95	9550
DTS8	Folding	8	8.76	3	3.95	11135
DTS9	Folding	9	8.76	3	3.95	12673

DD Range

Code	Machine Type	Working Width (m)	Length (m)	Width (m)	Height (m)	Weight (kg)
DD3	Mounted	3	-	3	-	2700
DD4	Folding	4	7.12	2.91	3.95	6789
DD5	Folding	5	7.12	2.91	3.95	7797
DD6	Folding	6	7.12	2.91	3.95	9050
DD8	Folding	8	8.76	3	3.95	10330
DD9	Folding	9	8.76	3	3.95	11448

3. Preparation & Set Up

The following statements apply to the full range of Sumo drills. For an overview of your specific machine, see associated Machine Manual and Parts Book in conjunction with these instructions.

3.1 Pre-Check & System Overview

Before performing any other action on a Sumo machine, always check the following:

- Check the machine for worn or loose parts, mechanical and structural integrity, hydraulic leaks, exposed or corroded wires, warning label cleanliness and clarity.
- Maintenance programme carried out in line with schedule.

Faulty equipment can lead to damage to the machine or injury to persons. Always be diligent and ensure the machine is in perfect condition before use.

3.2 Hitching & Tractor Connection

Faulty hitching up of the machine to the tractor causes dangers, which could result in severe accidents. Hitching and unhitching of the machine should only take place on a secure and level surface with chocks placed under the wheels of trailed machines to prevent the machine from rolling away.

General Safety

Familiarise yourself with the machine and all safety guidelines/regulations given in this manual, industrial standards, and safe work practices, before attempting any hitching of Sumo Machines.

Never allow anyone to stand between the tractor and the Sumo machine whilst the tractor is manoeuvring into position. Only once the tractor is in position and secured against rolling away, by means of parking brake and/or wheel chocks, can the operator/third party secure the machine to the tractor.

Ensure the wings are either in the fully up 'transport' position or fully down in the "work" position before uncoupling from the tractor. The machine should always remain secured to the tractor when the wings are anywhere between fully up and fully down.

Always ensure tractor hydraulics are depressurised before attempting hydraulic connection.

Types of Hitch

Sumo machines come with a variety of hitch types; fixed, adjustable, bolted. The tractor's hitch must be suited/adapted to match the machines requirements.

Fixed hitches generally refer to either a fixed position drawbar for trailed machines, or three-point linkage for mounted machines.

Adjustable hitches are single point connections that allow the hitch height to be adjusted to suit tractor requirements.

Bolted hitches generally refer to an external supplied, pre-rated and approved hitches which can be purchased separately or selected during the consultancy period (Note: These may not be available on all machines). For more information contact your local dealership or Sumo representative directly.

Fixed (1) **Fixed (3)** **Adjustable** **Bolted**

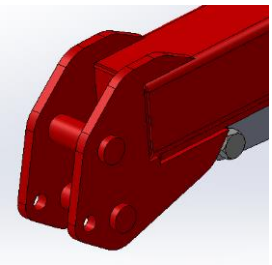
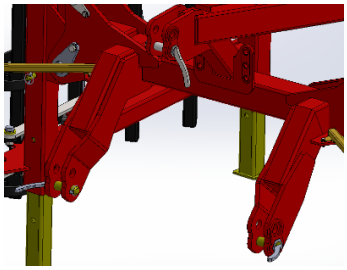
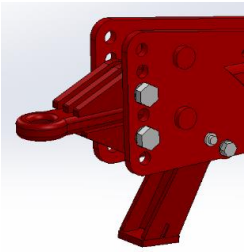
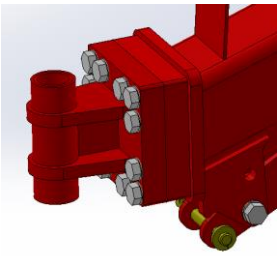

Standard Hydraulic Connections – Colour Code

Sumo's colour coding is done through a sequence of cable ties attached to the individual hydraulic hoses, as seen in this picture. Before connection, ensure all connections are cleaned to reduce the risk of contamination.

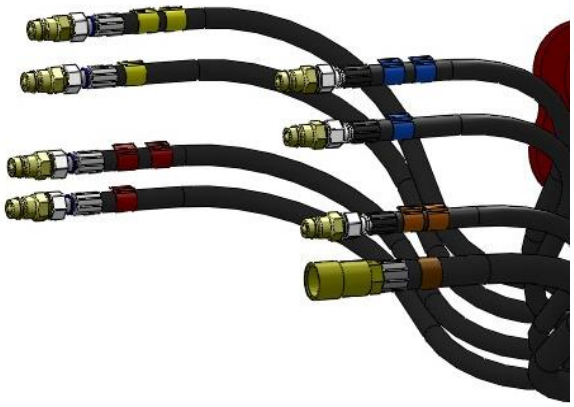

One cable tie = Return
Two cable ties = Pressure

- **Yellow** = Axle
- **Orange** = Fan
- **Blue** = Coulter
- **Red** = Wings/Markers

Free-Flow Return

Damage will occur to either the fan motor seal or the oil cooler (oil coolers are only fitted to seed & fertilizer machines) if the free-flow return hydraulic line is not connected to the tractor first. Any movement of the fan or the coulters immediately pressurizes the free-flow return line. This includes just lowering the machine to the floor to allow the coulters to "take some weight". Doing this will displace oil from the coulter rams and pressurize the free-flow line, which may result in component damage. When connecting the free-flow line it is necessary to observe the back-pressure present. A gauge for this reason is provided, mounted on the fan. The maximum return pressure is 15bar. Running with a pressure higher than this will result in damage, so it is then necessary to take steps to relieve pressure in the free-flow line. This is done by coupling it to the tractor via the QRC.

Air Brake Connections

The air brake hoses are colour coded as follows:

Yellow = Service Line 

Red = Emergency Line 

Hydraulic Brake Connections

Hydraulic Brake hose connections are not colour coded, however the connection socket is shaped so that it cannot be mistaken or interchanged with any other connection. Ensure hose is depressurised before coupling/uncoupling.

3.2.1 Mounted Machines

Due to the physical nature and weight distribution of some Sumo machines a category three enclosed ball top link is highly recommended. Due to the exaggerated loads experienced during normal working conditions, the top link pin is considered as a consumable part and should be checked for wear on a regular basis.

When hitching the Sumo machines three-point linkage to the tractor, ensure the linkage arms are correctly angled so that the lower arm is horizontal and top arm linkage is diagonally aligned with the tractor's front axle. This will ensure a strong, stable weight distribution and connection. Top & Bottom linkage arms should never be parallel. Having them parallel will reduce the tractors drive wheel grip and may cause damage to both the tractor and the linkages.

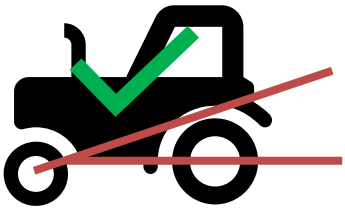

Steps:

- Attach lower linkage points first, then attach the top linkage, ensuring a permanent and secure fix.
- Turn tractor off, float hydraulic systems, then safely connect hydraulic & electric connections.
- Lift machine just enough to clear the ground of any parking feature/working instruments.
- Remove parking features/position them in the transport/working positions.
- Perform all necessary tests as outline within this manual.
- Turn tractor back on.

3.2.2 Trailed Machines

DD & DTS Trailed machines only come with a rigid design. Therefore, all manipulation of the machine height and parallelism is done via the axle and tractor positions.

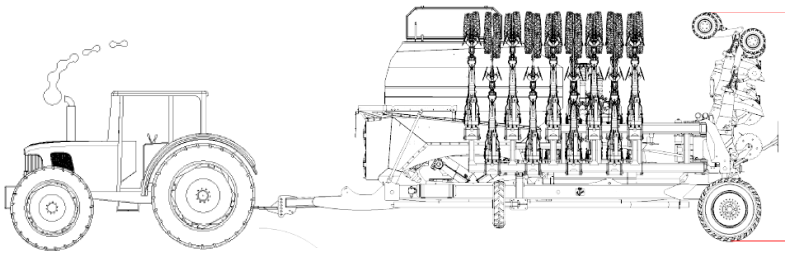

Steps:

- Slowly back tractor up to machine.
- Release pick up hitch in a low position, extend outwards if required.
- Reverse carefully up to hitch and locate hitch onto machine towing eye.
- Retract hitch if it has been extended.
- Raise hitch until locking pin is secured.
- Lower three-point linkage to release upward pressure on pick up hitch.
- Turn tractor off, float hydraulic systems, then safely connect hydraulic & electric connections.
- Lift machine just enough to clear the ground of any parking feature/working instruments.
- Remove parking features/position them in the transport/working positions.
- Perform all necessary tests as outline within this manual.
- Turn tractor back on.

3.3 Electronics Connection & Testing

Plug all electronic equipment in. Walk around the machine and ensure all lights are functional. Visually inspect wiring looms for any exposed wires, breakages or damage. If the system shows any sign of issue, see the troubleshooting section of this manual. If you have any additional Sumo electronic equipment, see the Optional Extras/Attachments section in this manual.

3.4 Hydraulics Testing

Check general hoses condition, abrasion, kinks etc. Visually inspect for leaks or damaged connections. Do not touch with hands or get close enough to inhale any vapours. Check cylinder condition and cleanliness. Run each system individually i.e. wings up and down, drawbar up and down. If the system shows any sign of issue, see the troubleshooting section of this manual.

3.5 Uncoupling of Tractor

Never uncouple on an uneven or unstable surface. Ensure both the tractor and the Sumo machines are on level, solid ground and put them in a secured configuration, by use of handbrakes, chocks and any other movement prevention systems available.

Tractor must be fully immobilized with the key removed from the ignition. Obey all other relevant safety practices outlined within this manual, including but not exclusive to, the machine in general, hydraulics and electrics, and environmental awareness.

Locate machine on the provided stands, or parking elements (see parking section of this manual), Depressurise all hydraulics before disconnection, and ensure all electrics are detached and safely tied back. Only once the machine is fully stabilised and clear of the tractor linkage should the tractor be driven slowly away, remaining vigilant to not drag or knock the machine.

4. Transportation

When the machine is being transported on the road the local road regulations must be adhered to, regulations such as transport length, width and height, escort vehicles & loading.

Due to the length and design of many Sumo machines, the transportation wheels are often to the rearmost of the machine meaning it will cut corners. Care must be taken to ensure a wide swing and reasonable turning arc is maintained to avoid any fouling of other vehicles or road markings/obstacles.

Note: Training by Sumo is required for loading any machine for truck transportation.

General Road Safety

- Always consult and abide by your local highway code.
- Observe the respective regulations when using public roads and ensure the machine is in the legal transport position before proceeding.
- Check around the machine before moving off or starting up (Watch out for children or animals!). Make sure you have adequate all-round visibility.
- Always match your speed to the local conditions. Avoid any sudden acceleration or turning manoeuvres when driving uphill or downhill or when travelling across a slope.
- Consider the length, the wide overhang, the folded height and the sideways force acting on the machine when turning or negotiating curves.
- Ensure all electronics are connected and fully functional.
- Ensure all markings and signage are clean and fully visible.
- Empty all machines of grain and/or fertiliser, and any additional loads before commencement of journey to minimise burden weight.
- Clean shoes of any debris or mud to ensure clean, non-slip contact with pedals.
- Removed any gloves that may have grease on them, and clean hands to ensure a good grip.
- Never operate hydraulic systems whilst the machine is on public roads. All hydraulics should be disconnected and strapped down to avoid any accidental unfolding.
- Ensure all parking features are fully retracted and in the correct transport position.
- Ensure all hitch points are firmly secured and pins are prevented from being unsecured.
- Check no parts are loose, damaged or broken, especially after being in work.
- Check for hydraulic leaks or damage that might cause them to fail. Do not take on the road if there are any signs of issue.
- Check tyre pressure and wheel nut torque are adequate.
- Mounted machines: Ensure all legs are well clear of the ground.
- Ensure dog bone/wing latch is firmly applied.

4.1 Transport Preparation & Positions

When transporting the machine on the highway it **MUST** be folded into the correct transportation position in order to maintain the values given in the Technical Data section of this manual, see corresponding Machine Manual & Parts Book for Transportation Positions. Any machines failing to be in these positions whilst being driven on the road will likely exceed your local road legislation and regulations, and run risk of causing potentially fatal damage to other road users. It is the sole responsibility of the operator to ensure they comply with all local road laws and Sumo accepts no liability for negligence or carelessness.

4.2 Transport Guidelines & Route Planning

The route planned should also be considered to ensure that the machine will not incur any difficult or extreme manoeuvres. The following is a list of basic guidelines design to encourage safe journeys.

- Avoid low bridges or over passes. Sumo machine heights may vary, especially when mounted directly to tractors. Care must be taken to ensure adequate clearance.
- Avoid narrow gaps. Sumo machine widths may vary. Ensure wings are folded fully, and ensure adequate clearance from any obstacle.
- Avoid weight restricted roads and ensure Sumo machines are not over-burdened with any additional weights, such as mass mud collection, stored grain or fertiliser.
- Avoid any steep inclines or drastic turns that may cause the tractor and/or machine to roll back or tip over.

4.3 Parking

The following Parking options represent the generic options available, but actual features are dependent upon machine type and spec purchased. Consult Machine Manual & Parts Book for more details.

Always check Brakes daily before use to determine if the braking is fully functional. Any adjustments or modifications to the braking system should be carried out by or under the instruction/supervision of Sumo UK.

4.3.1 Stands

Parking stands come in two primary models – Fixed, and Adjustable Jack.

Note: Always try to locate the machine on a flat, rigid surface to avoid additional strain, slip or sinking of the stand. This action should only be performed when the full weight of the machine is supported by a tractor. Once stand is positioned, slowly lower machine back down until it is supported, ensuring to keep fingers well clear of any finger traps. Some stands may be heavy so be careful weight is not burdensome before trying to lift or lower it.

Fixed Stands

Fixed Stands generally consist of a welded bracket, a bolted joint and a pin, offering two positions: In Work and Retracted. Simply remove pin, rotate the bracket until in retracted or in work position and re-insert pin. Pins must always be secured with an additional lynch pin. Never lift stands from the front or back; always position them from the side so the stand pivots to the left or right of you.

Example:

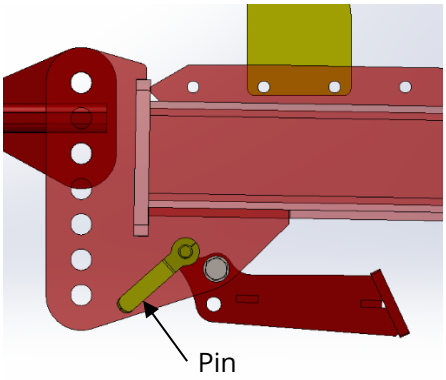

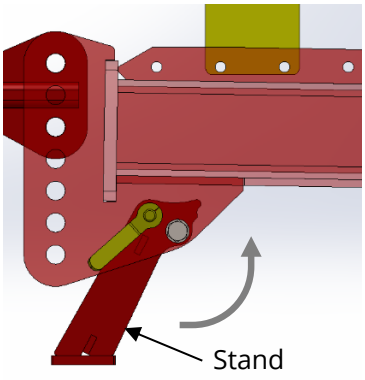

Adjustable Jack Stands:

Adjustable jack stands generally consist of winding or lever systems allowing for a much slower and measured movement, whilst also providing greater support, or assistance with hitching/unhitching. To position an adjustable jack stand, support stand with one hand and pinch the two clasp levers together with your other hand until clear of holes, then lower slowly pivot and lower the unit down until in next set of holes. Be careful these stands can be heavy. To determine height, apply reasonable pressure to the movement mechanism until desirably situated. Try not to jack the machine up any higher than is absolutely necessary as this might have a de-stabilising effect.

To release pressure on lever systems, locate the pressure relief tap and open slowly ensuring nothing is above you or about to descend.

Examples:

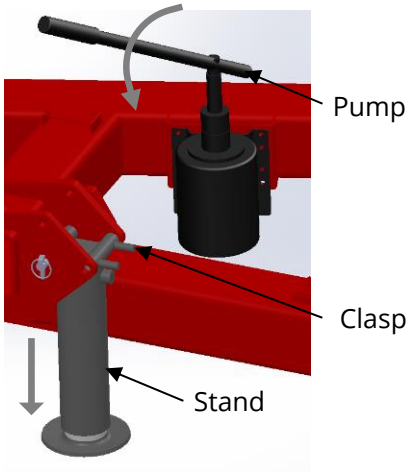

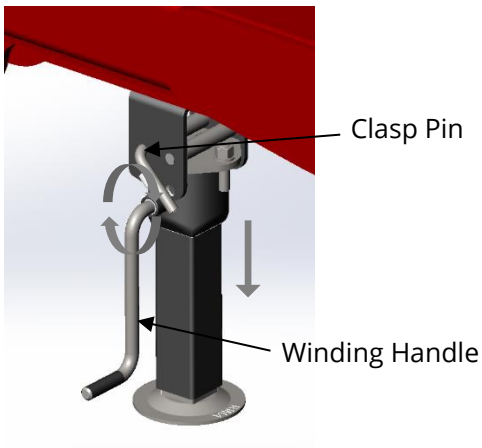

4.3.2 Handbrakes

Handbrakes are tailored to match each machines construction, but generally operated from a single crank lever or winding handle, usually positioned at the front or rear of the machine. Before operating the handbrake ensure the machine is fully supported by the Tractors handbrake. Fully apply handbrake by pivoting/turning the lever in the required direction and ensure machine hold. Before unhitching the tractor, ensure any stands are down and positioned suitably. On winding handbrakes make sure to put securing cable to the handle to ensure handbrake is not activated during travelling.

Examples:

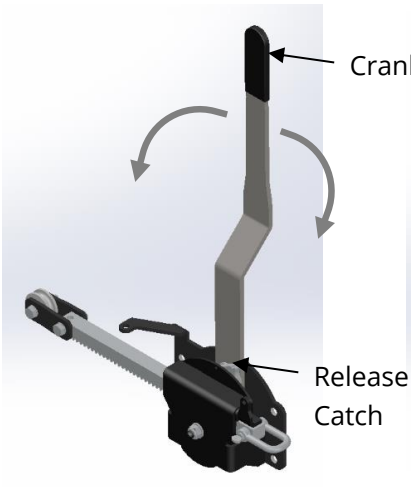

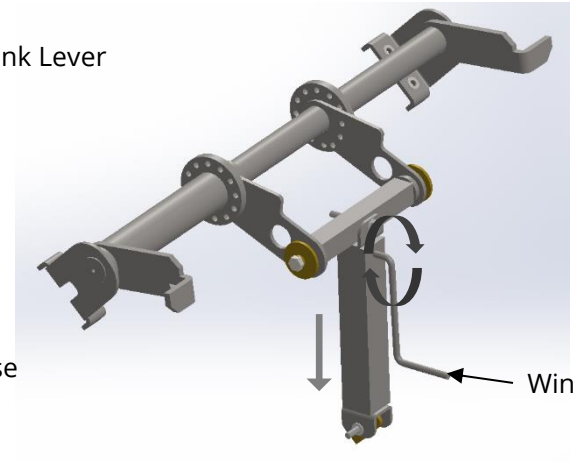

4.3.3 Pneumatic Brakes

Pneumatic brakes generally consist of two brake cylinders (one per wheel), a pressurised air tank, a set of configured brake levers (Both usually located at the rear of the machine closest the axle/wheels), and an REV (Typically located near the front of the machine). For connection details, see Hitching and tractor connections section of this manual.

Example System:

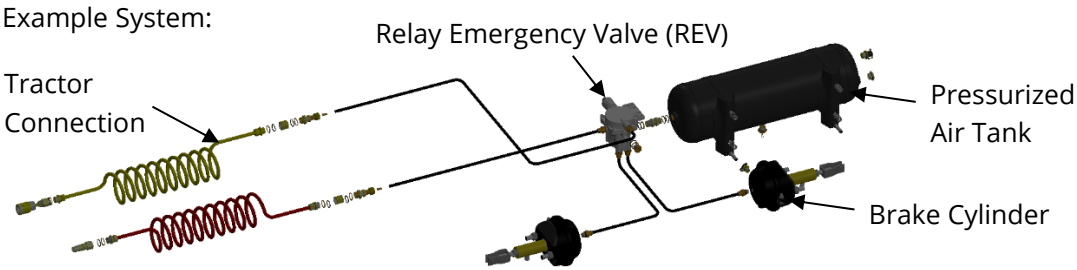

Our Homologated Pneumatic brake systems also include a Park/Shunt Valve normally located at the front of the machine for temporary release of machine brakes for shunting, if no tractor is available/connected. Press once only to release brakes. Make certain to have a clear environment before release and keep well clear of machine just in case it slides/moves unexpectedly. Never use when machine is on an incline. Note: Brakes will lock if Park/Shunt Valve is pressed twice.

Example System:

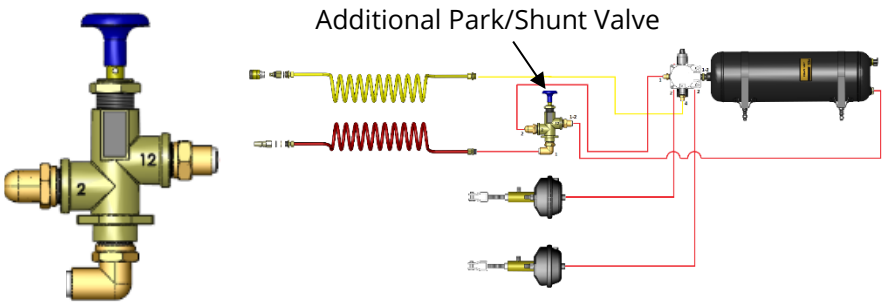

4.3.4 Hydraulic Brakes

Hydraulic brakes generally consist of two hydraulic cylinders attached directly to the axle brake levers, typically located at the rear of the machine/mid-machine axle. For connection details, see Hitching and tractor connections section of this manual.

Example:

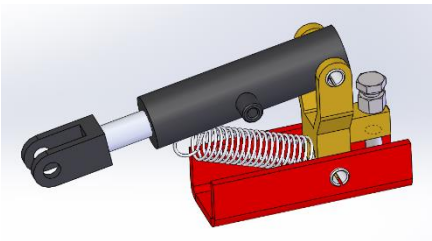

5. Operation & Adjustment

Before using any Sumo machine, you must ensure you are qualified and trained to use the machine in the safest possible manner. Familiarise yourself with both the machine and this manual and follow its instructions. Sumo will accept no liability for any persons trained/untrained, using the machines inappropriately.

The material within this section is correct, as known at the time of publication, but may be subject to change. If in doubt, ask your local dealership/Sumo representative.

5.1 Operations

Before Start

Ensure machine is correctly hitched as described in the Hitching section of this manual, and ensure all securing mechanisms such as dog bones and/or wing locks are fully detached/disengaged.

5.1.1 Straights

Lower working implements into the ground and accelerate slowly to ensure the machine does not endure any immediate jolts of pressure. This will help extend the life of the product and reduce any damage/wear to wearing parts.

Adjust hydraulic systems gradually and do not overburden the system with constant heavy/excessive pressure. This may damage the system and instruments. Some machine elements such as Tines are designed to be flexible and absorb moderate amounts of strain, but excessive/ prolonged amounts may cause them to snap, so always be gentle but assertive with the machinery.

Advisable speed for any Sumo drill is 5 mph/8 km.

5.1.2 Turning

Depending on the machine purchased, some Sumo machines can have large turning circles. Ensure there is enough berth before initiating any turn. Raise all implements fully out of the ground. Move slowly so the weight of the machine does not shunt drastically over to one side and topple the tractor. Avoid turning on any slopes or unstable ground.

When turning on headlands the machine should be lifted clear of the ground and can be run on just the packer to prevent excessive compaction of headlands rather than running on the wheels.

5.1.3 Hydraulics

Folding/Unfolding

Always ensure a safe working environment as described within this manual when folding/unfolding wings. Perform movements slow and safely paying special attention to weight distribution, equality of descent, machine balance & stability, environmental influences and neighbouring features/obstacles.

Manual Change-Over Valves (MCOV)

Sumo use MCOV's to isolate different hydraulic systems from one another. Depending on the system required, simply pivot the lever to the desire direction. Always operate hydraulic systems slowly to ensure the correct system has been selected.

Accumulators

Sumo hydraulic systems use high pressure accumulators, which can present a danger if tampered with or misused. This includes drilling, welding or any other process that could compromise the safety of the accumulator. It is expressly forbidden for an operator, or any third party to dismantle or adjust the accumulator in any way. Doing so will invalidate any existing warranty. If the accumulator fails it should be changed under the supervision/instruction of Sumo UK.

5.1.4 Pressurised System

Sumo Drills operate using a pressurised metering system to ensure controlled and consistent seeding. It is therefore vital air leaks are kept to an absolute minimum to ensure that metering remains accurate. Failure to isolate leaks may cause substantial metering errors. During operation it is imperative hopper lids should remain closed and sealed. It is good practice before drilling commences to manually check that there is no air leaking from the lid seals. See 'Hopper Lids' section regarding the adjustments to hinge and catch to improve seal quality as the machine ages. It is important to check all seals on the pressurised system on a daily basis i.e. hopper lids, nylon sleeve, Orga inserts and replace where necessary to ensure that the metering is accurate throughout the life of the machine.

5.1.5 Hopper Lid

Hopper lids are adjustable to ensure you can create an airtight seal throughout the life of the machine. Seals should be checked to ensure that they are creating an airtight seal and should be replaced when they cease to function. When drilling it is vital that the hopper lids are closed and secured, this will prevent air leaks from the hopper that can lead to metering problems. The drill operates using a pressured system to ensure a positive, consistent seeding rate.

To adjust the lid, loosen the locking nuts (highlighted in the cross section) on the underside of the threaded pivots. The uppermost nut then can be adjusted up or down to achieve the appropriate seal required for the system to work properly. It is important to tighten the locking nuts after the appropriate setting is achieved. When adjusting the hinge, it is equally important to adjust the catch in the same manner to create a consistent seal all around the rim. This can be done be loosening the locking nut and adjusting the catch up or down in the same way as the hinge. Always remember to tighten the locking nut once complete.

5.2 Adjustments

Always ensure you wear the correct PPE as described previously, before attempting to make any of the following adjustments, and watch out for any finger traps/potential crushing.

5.2.1 Chassis Height / Parallelism (Trailed Machines Only)

Chassis height can only be adjusted via the tractor/ hitch point, simply by unbolting the hitch eye and raising it, then re-bolting it to the chassis. Note: the chassis should always be parallel to the ground. Torque Value = 600Nm.

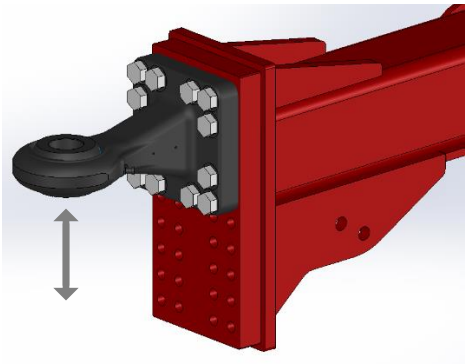

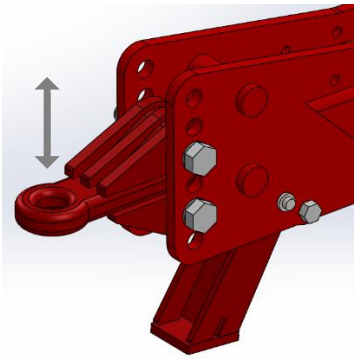

5.2.2 Isocan Artemis – Seed Drill Controller

The isocan Artemis system is design to allow automatic, Variable rate control of any drill. You can at any time manually override the predetermined rate as field conditions require.

- The basic functions are:
- Variable Rate Control
- Tramline Control
- Forward speed alarms
- Hopper level alarm
- Fan speed & alarm

- Information totals

Please see your isocan Artemis manual for further guidance.

5.2.3 Hydraulic Coulter Positioning

The hydraulic coulters run using a constant oil supply from the tractor. The pressure in the system is regulated using a pressure relief valve located at the front of the drill near the storage locker. The pressure gauge fitted to the valve displays the working pressure. About 10 L/min (or approx. 20%) of oil will be required to allow the coulters to respond to changing ground conditions. If coulters don't respond fast enough increase the oil flow, but care must be taken not to over-supply to a point where the fans oil supply is compromised.

The default working pressure is 30bar for DTS machines & 50bar for DD machines. This pressure will need to be adjusted according to local conditions. For example, it will need to be increased slightly (+/-5bar) as the leg is set to work deeper. Soil types, stone concentrations and desired firming will all influence the pressure setting. The pressure should not be set so high that the transport wheels are lifted off the ground.

Pressure Too High

Chassis wheels lifted off the ground.

Pressure Too Low

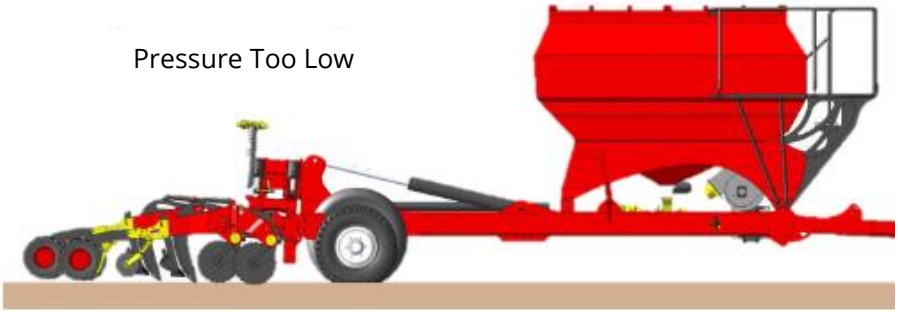

Wheels on the ground but not penetrating.

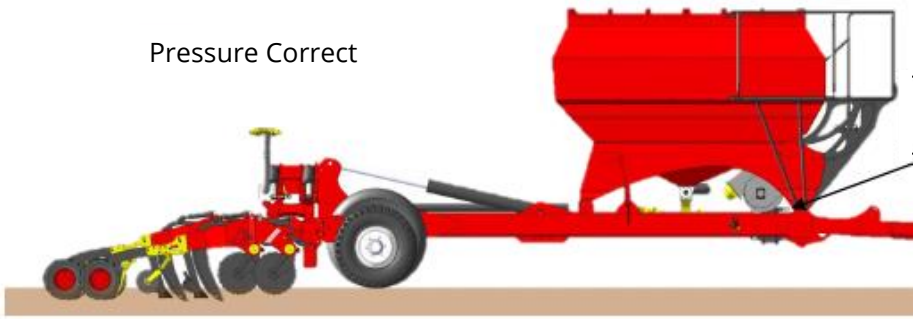

Weight spread between wheels and coulters with a working pressure between:
(DTS = 5 and 35 bar) (DD = 25 and 70 bar)

DD Machines Only: In addition to the pressure adjustment, further adjustment is available to the coulters in terms of a shim levelling feature. The position of the drawbar coupling can influence the behaviour of the coulters and at worst could result in unbalance coulter rows e.g. more pressure on the front row than the rear row. The headstock can therefore be shimmed to level it up in relation to the ground. These shims are located on the axle and contact the underside of the chassis rails.

The wings can also be shimmed up to level them in relation to one another. These are located near the wing hinges

5.2.4 DTS Coulter Overview

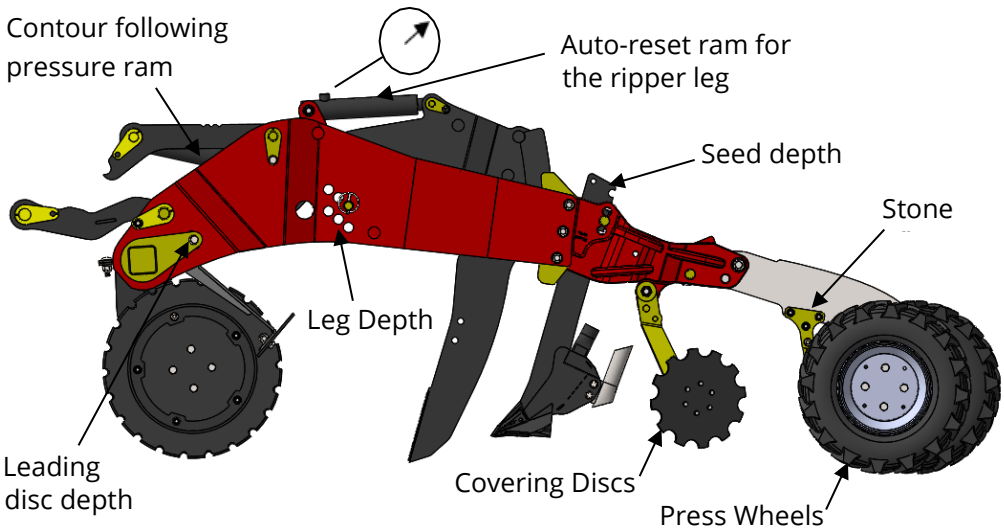

Leading Disc

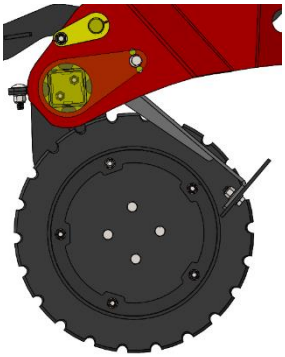

The leading disc depth can be adjusted by removing the bolts and rotating the unit to the desired position, to make the working action more or less aggressive.

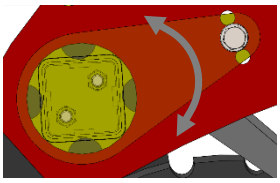

Auto-Reset Leg Depth

Caution! Check leg is always deeper than the coulter.

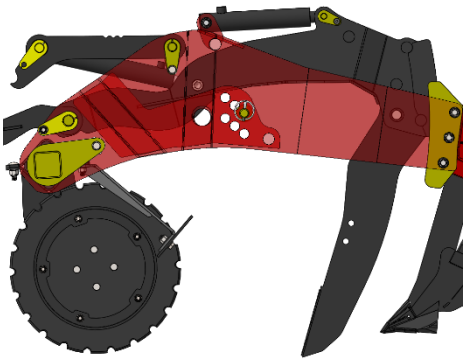

Full Retracted

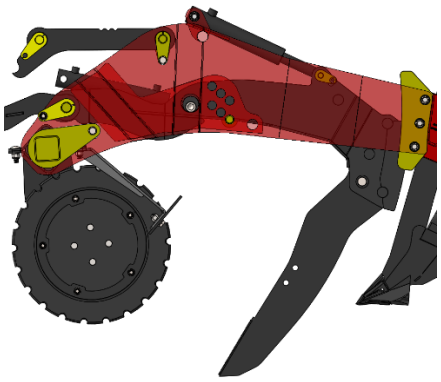

Lowest Position

25mm leg depth pin fitted below the leg arm as a depth stop. Hydraulically retract all legs before adjusting pin.

Loosening leg **guide** setting:

- Cereals 100-150mm (4-6”)
- OSR/Beans 150-225mm (6-9”)

Seed Depth

The seeding depth is altered by removing a 20mm pin and lifting or lowering the coulter. For bean drilling a 1" seed boot can be fitted by removing roll pin.

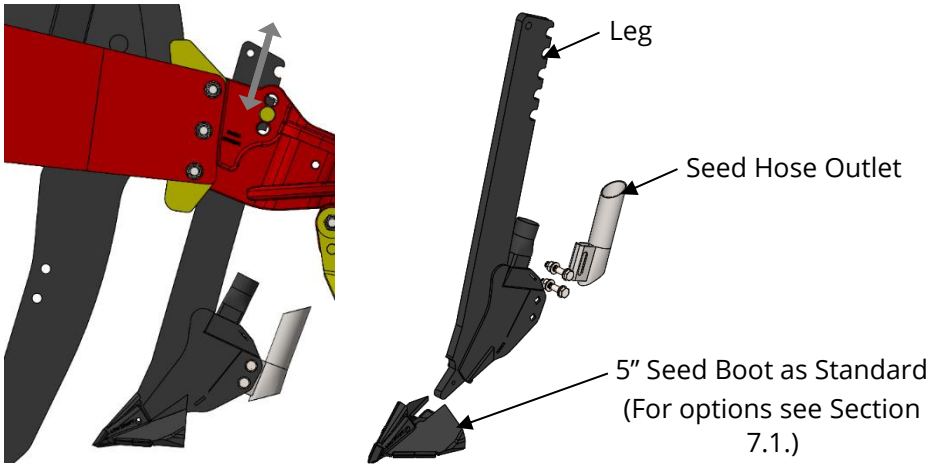

5.2.5 DD Coulter Overview

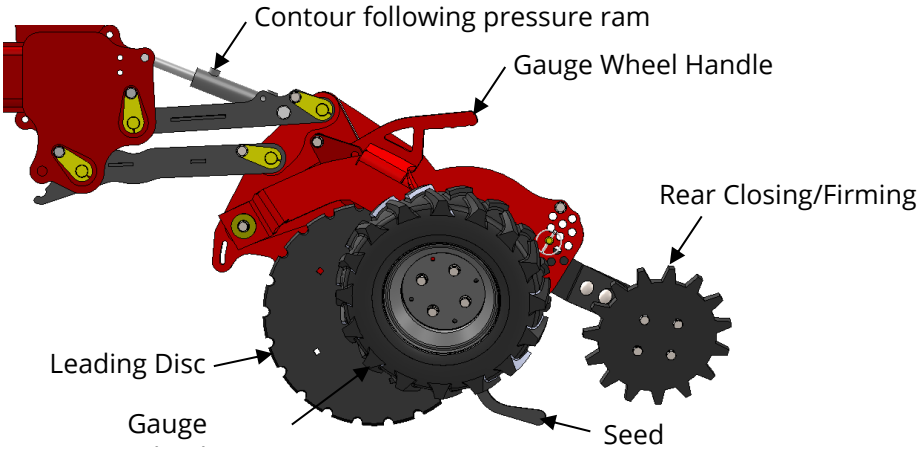

Leading Disc

The leading disc is in a fixed position and can only be adjusted via the hydraulically controlled coulter height.

Gauge Wheel

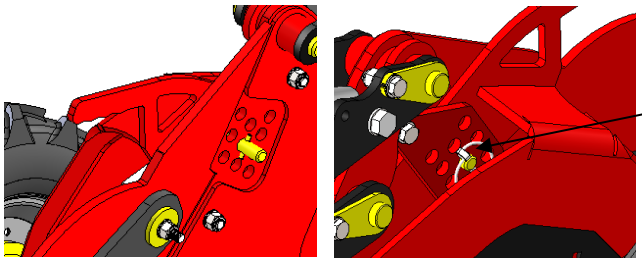

The coulter gauge wheel prevents furrow "side wall burst" as well as controlling the seed sowing depth. To adjust position simply remove pin raise or lower wheel with handle, and re-insert pin. Fine tuning can then be achieved by altering the hydraulic pressure.

Two-Part Coulter

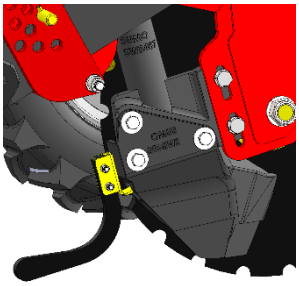

The two-part cast coulter includes a 3-point adjustment system which allows for the front edge of the carbide tile to be run in very close proximity to the disc. The vertical slots allow for adjustment when the disc wears.

Seed Tab

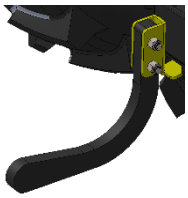

The seed tab is designed to prevent "seed bounce" i.e. it ensures seed remains where it should be.

Rear Closing/Firming Wheel

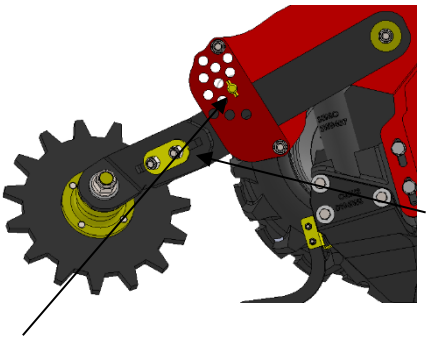

The rear closing wheel is designed to firm the seed in place as well as to collapse the seed furrow side wall and subsequently ensure adequate soil to seed contact.

Fore/aft as well as slight up/down adjustment of the closing wheel is achieved here.

The rear closing wheel can be pinned in a rigid position but may also be operated in a "floating" state running under its own weight only. Care should be

taken not to apply too much load on to the wheel as this could compromise sowing depth.

5.2.6 Fan System

If it is found that the fan speed cannot be adjusted finely enough due to the increment being too large on the tractor spool, there is a needle value located at the bulk head end of the hydraulic pipe that feeds the fan.

The adjustment should be carried out by setting the fan speed slightly higher than desired and then reducing the flow of oil by rotating the needle valve clockwise.

Fan Return Pressure

When connecting to a tractor for the first time, ensure the fan return connected. Failure to do so will result in damage to elements of the drills hydraulic system.

Fan/Coulter Pressure Gauges & Balancing Valves

The below are the indicators of pneumatic flow in the Fan/Coulter air system.

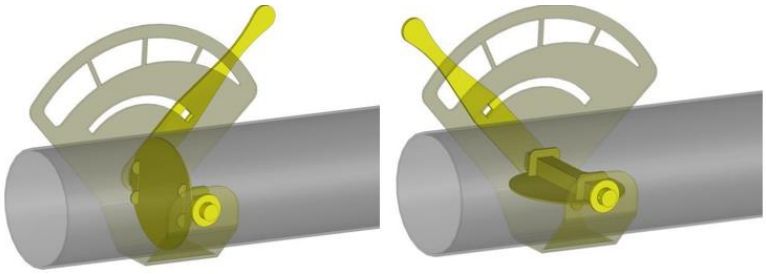

Low Pressure **High Pressure**

The seed/fert transfer pipes are fitted with fan balancing valves so that adjustment can be made to the velocity of the air travelling through each pipe. This may be necessary when there is a large difference in application rates between each metering unit. For example, there may be a situation when you are drilling 120kg/ha of seed and 340kg/ha of fertiliser, the percentage air velocity on the seed side would need to be less to cater for the difference in seed/ fert rates. This can be achieved by adjusting the air valve on the seed pipe by moving the lever towards the rear of the machine (reducing air velocity). Where possible the valves should be left fully open, only reduce the air velocity on the pipe metering the reduced rate. Where rates are equal the valves should both remain fully open.

5.2.7 On/Off FCV Balancing

Under the toolbox at the front of all trailed machines is a flow control valve tap which controls the flow to the main lift rams and also the seeding shut-off ram. The shut-off ram has a magnet attached to one end that starts and stops seed dispensing based on its proximity to the parent sensor. Correct balancing is essential to maintaining a responsive system.

Less flow means the shut off responds quicker but lift will be fractionally slower. More open, will result in a quicker lift but will mean the shut off ram becomes lazy and could result in over-seeding at the end of each run and delays at the start of each run.

5.2.8 Calibration System

Is a simple valve to allow seed to drop through an outlet in the Seed/Fert transfer pipe to calibrate the drill for a required seed rate. When the flange is pointing down, the valve is shut. When the flange is pointing horizontal, the valve is open (calibration position). Ensure this is closed before commencing seeding.

1. Open slide portal to allow seed to flow out of the Air Transfer Pipe directly below the Orga metering outlet.

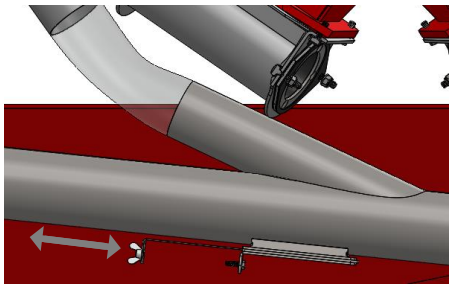

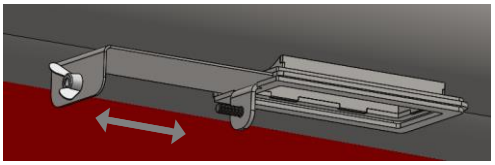

2. Switch the scales ON and check units (kg). Zero the scales with the weight of the calibration bag.

3. Positions the calibration bag to the Air Transfer Pipe using the straps.

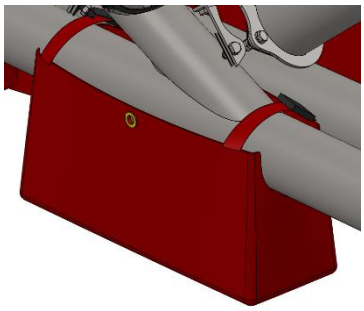

Caution! Always Prime the ORGA Metering Unit before Calibration
Press the Prime button fastened to the toolbox once. Then Press the button again at the point where seed flows evenly from the outlet. Empty contents of Calibration bag back into the hopper, Press ESC on Control Box, then proceed to step 4.

4. Press the white prime button once. This will put the control box in calibration mode and start the motor turning and metering seed.

5. Press the white prime button once again to stop the motor once a suitable sample is collected.

6. The seed dispensed out of the Orga Metering Unit can be weighed using the digital weigh scales supplied with the drill. Remember to subtract weight of the calibration bag.

7. Close the Calibration slide portal after last calibration procedure and ensure it is firmly bolted.

8. After the motor has been stopped with the white button the screen will show the expected weight. Then enter the ACTUAL weight dispensed using the keypad, see below. Check decimal place is correct, and press **ENTER** to confirm.

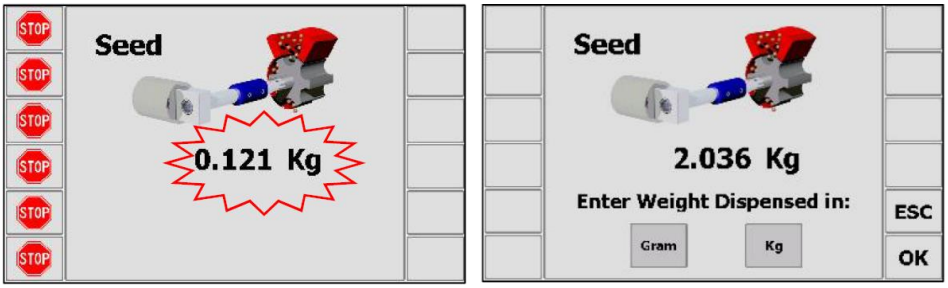

Screen Appearance During Calibration:

Note: The heading will either be SEED / FERT / LEFT / RIGHT according to the drill setup

9. Press ENTER again for the instrument to re-calculate and display the new calibration factor in kg/rev, the error %, and the maximum forward speed that is permissible based on the application rate set for the product.

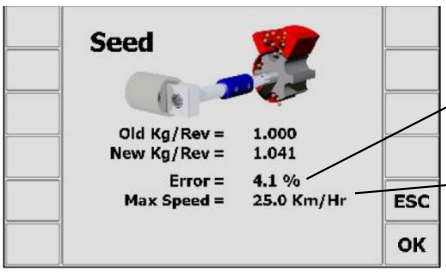

% difference between the old and new calibration.

Think! Alarmingly low
(Check gearing inserts recommended in the Seed Rate settings table at the rear of this manual.)

When changing between ORGA Setups the error % will be large, but a second attempt will reduce this.

10. Press **ENTER again to confirm and store** the new calibration factor, or press ESC to return to the SETUP menu screen.

11. This entire procedure should be repeated as many times as necessary until there is an acceptable error. (2 – 3 times is normally sufficient)

    It is recommended to reset the PART TOTAL to zero before commencing drilling. This will enable you after drilling an area, to quantify any error in the calibration factor by logging the theoretical amount of product used against a known amount used (a whole bag for example).

5.2.9 Orga Metering System

Sumo's versatile metering unit. The metering unit is designed so that it can meter any granular products at any reasonable rate and drilling speeds with only simple setting changes. The Sumo ORGA Metering Unit does not use traditional rollers. There are two metering units, one for each hopper. When the hopper is setup as a single large capacity, only one metering unit is necessary. The second redundant metering unit can be shut off using the hopper slide inserted above the metering unit. 6m DTS's and over also have the half width shut-off (HWSO) facility. This adds a further Orga metering unit to each product hopper, depending on drill specification, and therefore there can be up to four metering units in total per drill.

Set Up

Before any calibration test is performed the Orga Metering Unit must be set up for the seed required. Larger harder seeds like peas and beans do not require the nylon insert in the Orga housing. This is simply removed by two bolts. The setup should be based on the required seed rate, working width of the drill as well as driving speed. To ensure successful drilling, be sure to take into account the specific weight of the type of seed. It may also be beneficial to change the coulter outlets from the standard twin row tip to a single outlet type.

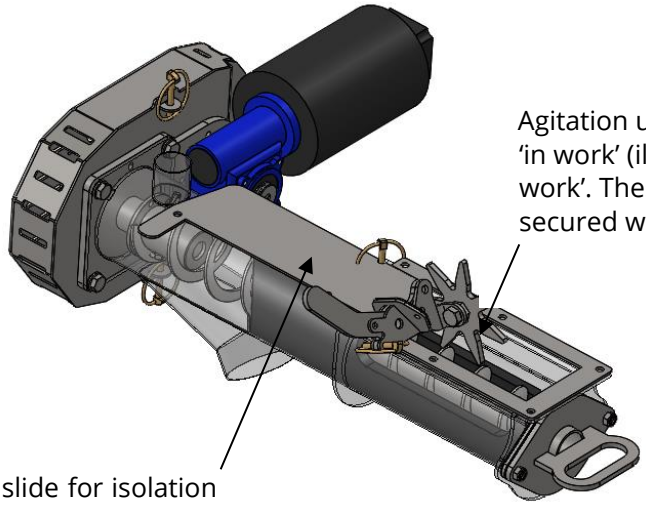

Agitation unit has two positions, 'in work' (illustrated) and 'out of work'. These positions are secured with a lynch pin.

Blanking slide for isolation of Orga from tank

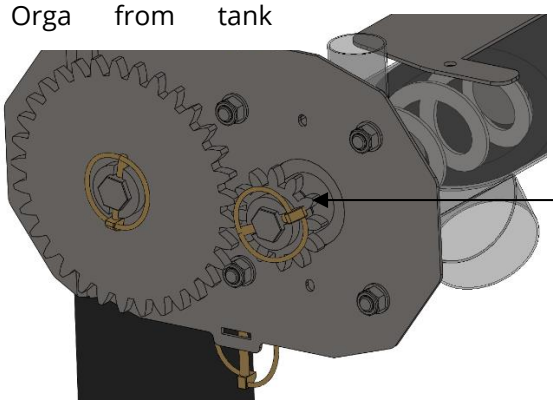

Gears are interchangeable between the Motor Shaft and Sumo ORGA shaft to achieve a wide range of seeding rates. e.g. 3:1 gearing can be swapped to achieve 1:3. Each Metering Unit is supplied with a large and a small gear.

Two variations of Insert

There are two internal inserts supplied with each Sumo ORGA. A long insert is used to reduce (approximately half) the seed rate for very low seed rates e.g. Oilseed Rape, Grass or Linseed. The inserts also act as a guide to align the Sumo ORGA. The Short Insert has no effect on seed rates and purely aligns the end of the Orga flighting.

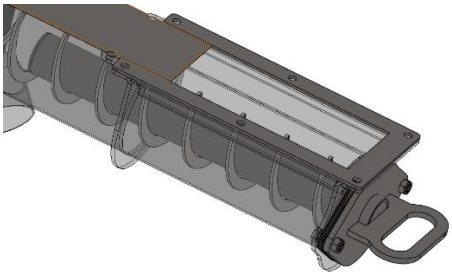

Long Insert

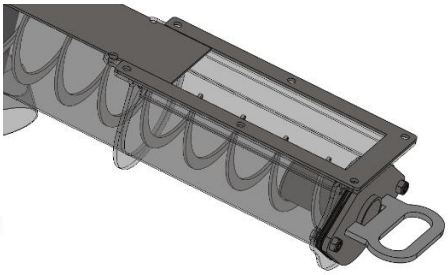

Short Insert

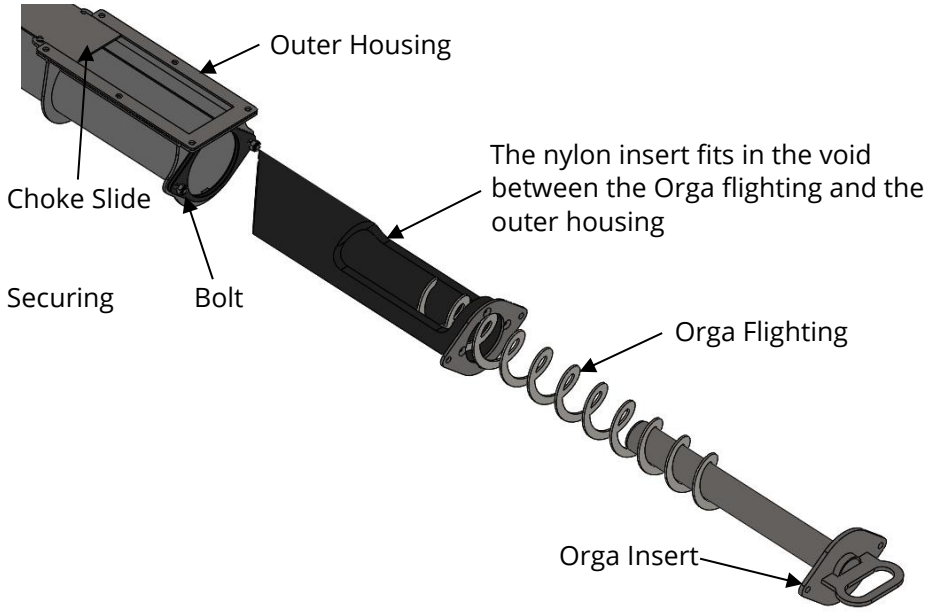

It is recommended to operate the Orga metering unit with the nylon insert fitted for small seeds and cereals in order to prevent potential minor seed rate output fluctuations when drilling on gradients.

When drilling fertilizer, peas, beans and other similarly large and hard seeds, the insert should be removed. In this circumstance, the void helps to allow smooth seed flow.

5.2.10 Seed Rate Settings

These tables are to be used as a guideline to assist in setting up the drill. Fine tuning may be needed depending on environment.

Safety Notices:

- Never operate Sumo ORGA Metering without gear guard in place.
- Never put any fingers into the Sumo ORGA Metering until unit is isolated from the power. Failure to do so may result in injury.

Key:

* Internal inserts are supplied in long and short lengths. The longer insert approximately halves the rate that the notched slide lets through its aperture. They also act as a guide to align the Sumo Orga.

*** The Gears supplied with the Sumo Orga are specifically designed for the width of Drill that is specified. There will always be a small and a large gear supplied.

**** Nylon insert not to be used.

Mounted Drill Set Up

Crop	Drilling Rate (kg/ha)	Insert *	Gear on Motor ***	Gear on Orga ***	Min Fan Speed (rpm)
Rape	3 10	Long	Small	Large	1800
Grass	20	Short	Large	Small	1900
Linseed	20	Short	Small	Large	2200
Cereals	80 100 150 200 250	Short	Large	Small	2500 2600 2750 2900 3000
Beans ****	150	Short	Large	Small	2500
Peas ****	150/250	Short	Large	Small	2500

Trailed Drill Set Up

Crop	Drilling Rate (kg/ha)	Insert *	Gear on Motor ***	Gear on Orga ***	Min Fan Speed (rpm)
Rape	3 10	Long	Small	Large	1800
Grass	20	Long	Large	Small	1900
Linseed	20	Long	Small	Large	2200
Cereals	80 100 150 200 250	Long	Large	Small	2500 2600 2750 2900 3000
Beans ****	150	Short	1:1 Gears	1:1 Gears	2500
Peas ****	150/250	Short	1:1 Gears	1:1 Gears	2500

5.3 Parts Replacement

For a list of the replaceable parts for your machine, see the relative Machine Manual & Parts Book. For any parts not covered in these documents, contact Sumo directly, as they may be relevant to a set period of manufacture. Sumo do not sanction the use of any products/parts not produced and managed by Sumo. Using external products will invalidate your warranty. When ordering replacement parts please have your serial number, part numbers and quantities at hand.

When tightening points to legged machines, do **NOT** use an air rachets, or over tighten with spanners. Excessive tightening will result in points cracking. Use standard ISO torque values for the fasteners suggested by the Parts Books, unless otherwise specified.

6. Maintenance & Storage Program

In general Sumo advise that you should visually check over the machine before each operation and transport to ensure there are no visible defects, loose parts or risk to either the operator or the public. Maintaining a thorough regimented maintenance schedule will help to prolong the life of your machine.

Wherever possible stand on flat platforms and **NEVER** on rotating, breakable, or adjustable elements such as the packer, points, disc etc. Avoid all cables and hoses. Be mindful of your footing and an environmental element that may cause additional movement. As the machines are mostly painted surfaces, they can be slippery. All wings and foldable elements must be full folded out before approaching the machine. **NEVER** stand on a folded machine, or under its foldable features. **NEVER** stand on the machine when it is connected to an active tractor. Follow all advised parking guidance given within this manual.

Wheel studs on trailed machines should be checked for tightness after the first 10 hours of operation and then again at regular weekly intervals. Tyre pressures should also be checked at regular intervals, more so during continued use. For torque values and tyre pressures, see the relative Machine Manual & Parts Book.

Some Sumo parts are considered to be wearable due to the nature of their design and use. For best results, check routinely and replace as required. This will help prevent loss/destruction of implements during work.

Check and re-tighten all fasteners every 24 hours. Tighten to standard ISO values, unless otherwise stated. If removed, all Nylock and/or Aero-tight nuts must be replaced, otherwise they lose their effectiveness.

6.1 Hopper Emptying

The hopper can be completely emptied of any product by the following steps. First, close the Orga metering slide, to shut off the tank. Second, remove the Orga insert and nylon sleeve to allow any product in the metering unit to drain out. It is advisable to have a bag or bucket to catch any draining product. Thirdly, the slide should be opened to allow product from within the tank drain out. This is the quickest and easiest method of draining the tank. It is important to replace the nylon sleeve and Orga insert tube after the product has been drained. It is a good time to check the integrity of the neoprene gaskets on the inside of the flanges to ensure that will continue to create an airtight seal. Failure to replace the nylon sleeve and Orga insert tube before new product is added to the hopper will result in product draining out the bottom of hopper.

6.2 Coulter Maintenance/Checking

The condition of each coulter assembly should be regularly monitored weekly. In particular all pivot points should be observed to ensure the grease-free polymer bushes remain tight. Any debris should be cleared from pivot points and bearings.

In addition to this, the relationship between the opener disc and the cast coulter face should be observed to ensure the gap is close enough to prevent ingress of straw and which may initiate a blockage.

On The DTS, the tungsten carbide tiles are fitted to prolong the operational life of the cast components. However, these should be routinely monitored in terms of wear.

On The DD, the grease free bearings should be externally examined for debris build up as well as checking for excessive “play”.

Disc wear and position of the cast coulter in relation to height should be considered. Disc wear will directly affect the depth to which the seed is placed. As the disc wears, the cast coulter component should be lifted on its adjustment slot.

6.3 Lubrication & Greasing

Lubrication and greases can be harmful to both the user and the environment. Avoid contact with skin/eyes. Make sure to clean up any unwanted spillage, and always wear the correct PPE for these activities. Sumo advises using sustainable, biodegradable oils, unless otherwise stated. Avoid mixing substances, otherwise you risk causing a chemical reaction. Do not use pneumatic grease guns as the pressure can cause damage to bearings. Always wash your hands thoroughly and other contaminated areas immediately after contact.

Hydraulic Cylinders Inc Auto-Reset - Grease points requiring one pump every 50 hours are located on all rams, wing hinge bushes, axle hinge bushes, drawbar hinge bushes front and back on both top and bottom elements. Exposed chrome ram rods should also be greased weekly to prevent these valuable parts from rusting and causing costly oil leaks.

Disc Bearings - The disc bearings should be greased until old grease is forced out once a week when in normal use and after washing the machine off to expel any water in the bearing.

6.4 Cleaning

High pressure washers can be used to clean Sumo machines, however for elements such as bearings which are greased and have oil seals, try to avoid direct contact. This may cause damage.

Sumo machines also have a variety of electrical equipment and cables running across the machine. To avoid electrocution do not touch the machines whilst cleaning it, and observe/repair any damaged electrical circuits.

For best results, clean the machine regularly and remove any build-up of dirt/mud which might solidify and later cause bungs. A clean machine is a safe machine, exposed to less pressure during working and transport, and will therefore serve you better and longer.

6.5 Storage

It is generally advised to store Sumo machines in their folded positions to minimise the exposure of unpainted rams, and lessen the impact on tools/wearable components. Follow all parking guidance given within this manual. Wherever possible, try to find a sheltered environment. If not possible cover with tarpaulin. This will better protect the machine and slow the degradation of paint and materials, as well as prolonging the effectiveness of greased areas.

When machines are to be parked up for the winter period, correct storage techniques are an important part of protecting the machine to ensuring a hassle-free season. When the machine has finished work it should be cleaned down and washed off to remove all traces of soil. Following washing off, all lubrication and greasing should be performed until old substances are forced out. To avoid delays next season, check machines for worn parts and get them replaced as soon as possible.

7. Optional Extras/Attachments

A variety of machines come with the options for multiple extras or attachments. For a list of available options, please consult your Sumo catalogue, contact your local dealership or Sumo directly, or search online – www.sumo1.com.

The following is a general overview of the Standard available options, there intended use, and any special safety measures associated with that part/assembly. Consult your Sumo representative before requesting any replacement parts/additional purchases, as some designs may not be compatible with your machine, and are also subject to change. For a more detailed outline, consult your Machine Manual & Parts Book.

7.1 Coulter Seed Boots

Some machines can be fitted with Coulter seed Boots, for details on available products contact your local dealership, or consult www.sumo1.com.

7.2 Air Brake

Some machines can be fitted with air brake systems, or air brake kits can be provided separately. For details on available products contact your local dealership, or consult www.sumo1.com. For system details, see Pneumatics brake in the transport section of this manual.

7.3 Tramlines

The Sumo DTS is unique in that the drill does not have any tramline markers as such; the coulters that are blocked off are lifted during a tramlining bout.

This system works by the way of a 3-way solenoid diverter, and the hydraulic feed form the bout markers.

When the bout marker is pressured in to work the spool should be left pumping for an extra 5 seconds to allow for the two tramline coulters to be raised. When the marker is retracted the coulters will resume normal work

7.4 Markers (6m & Below Machines Only)

Markers are designed for marking the tractor centreline. The distance between the first sowing row and the marker disc equals ½ sowing width plus ½ the seed row spacing.

Aim not to set the marker disc too aggressive as this may affect the performance of the drill.

7.5 Hydraulic Parking Stand

Depending on machine type, bolt on hydraulic parking stands may be available. For more details on how to adjust hydraulic parking stands, see the Parking Stands section of this manual.

7.6 Weight Transfer Kit

Some machines can be fitted with a weight transfer kit. For details on available products contact your local dealership, or consult www.sumo1.com.

7.7 Homologation

We are happy to announce that we are now homologated on a variety of machines. Providing your machine is compatible, homologation kits may be available in the not so distant future. Check back with us if you are interested for availability.

8. Troubleshooting

For all the follow points, proper PPE and care must be taken. Read and follow the instructions given within this manual exactly.

8.1 Mechanical Assemblies

Problem	Solution
Ceasing Parts	Inspect for rust/wear, grease daily or as guided by this manual, replace parts if necessary

8.2 Hydraulics

Problem	Solution
Leaking Cylinders	If under Warranty period, contact dealer. If not, tighten, if possible – Do NOT over tighten or you risk damage. Clean up excess/spilt oil – Do NOT expose skin to any fluids.
Leaking Hose Joints	Tighten, if possible – Do NOT over tighten or you risk damage. Clean up excess/spilt oil – Do NOT expose skin to any fluids.
Auto Reset - Loss of Pressure &/or Operation	Run adjustment check as per manual, if still not working Pressure valve may be faulty
Quick Release Valves Contamination	Keep clean, replace if necessary

8.3 Electrical Faults

Problem	Solution
Electric Wiring / Componentry	If under Warranty period contact dealer. Never manually feel for exposed wires etc

9. External Documentation

The following documents must be read and adhered to whilst using any piece of Sumo equipment. This is for your own safety and the safety of those around you.

9.1 List of Machine Manuals & Parts Book

A full list of Machine Manuals & Parts Books can be found at www.sumo1.com. Note: The manuals and machine parts books are relative to the time of purchase/date of manufacture and may not fully represent your machine. For any clarifications about discrepancies, contact Sumo directly. Machine Manuals & Parts Books contain critical information 'specific' to each machine/machine range. Ensure you have a copy of your machines corelating document and read it thoroughly in conjunction with this Operators Manual before using any Sumo machine. All documents are correct as known at the time of publication, but are also subject to change.

9.2 Associated Legislation & Compliances

Sumo machines have been designed and manufactured with safety and compliance in mind, but it is the sole responsibility of the owner/operator to ensure all local laws, legislations and compliances are met in regards to heavy agricultural machinery usage, safe working practices and environments, PPE, and Transportation.