7 Leg Trailed Subsoiler

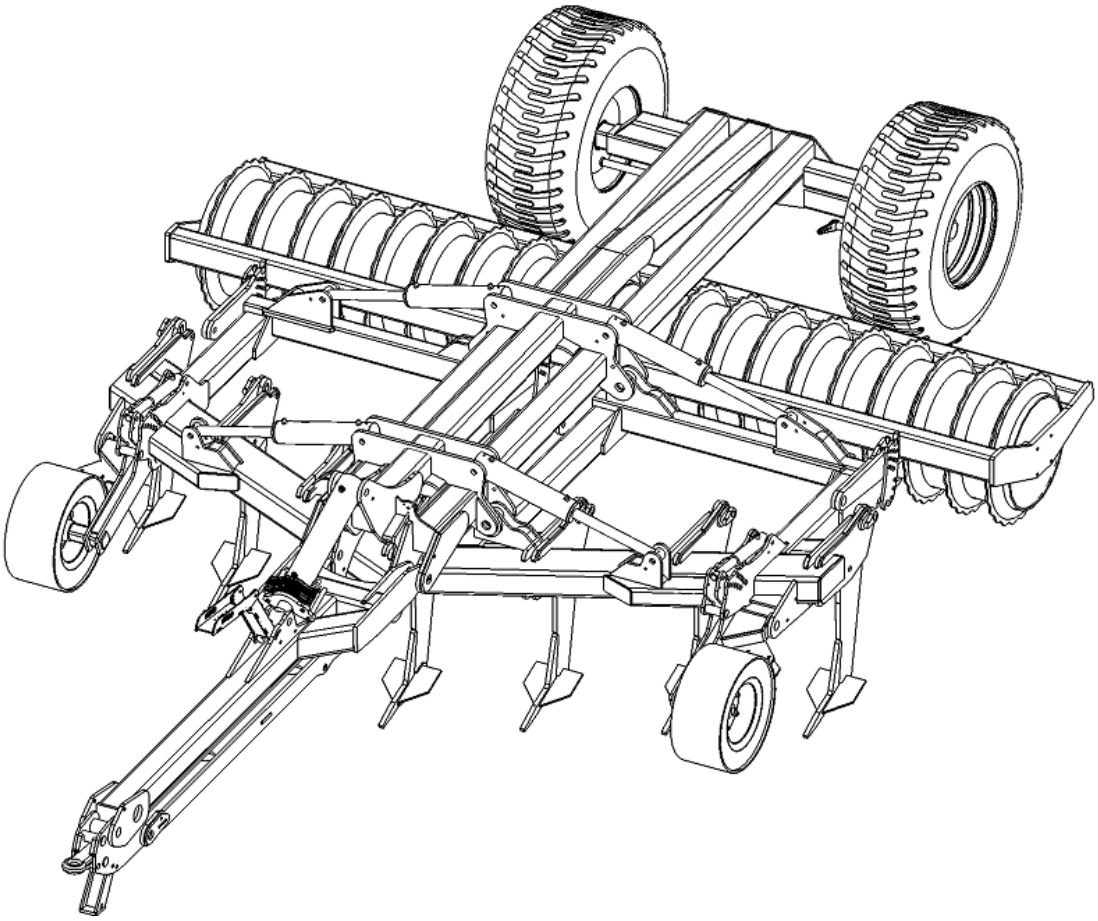

Parts list 2009
and
Operators Manual

SUMO UK LIMITED
Agricultural Machinery Manufacturers

www.sumo1.com

Redgates
Melbourne
York
YO42 4RG
Tel. 01759 319900
Fax. 01759 319901

1.0 Registration

Please complete this page and send it back to us at,

Sumo UK Ltd.
Redgates
Melbourne
York
YO42 4RG
Tel. 01759 319900
Fax. 01759 319901

SUMO SERIAL No:
For your own records.
(Serial plate on chassis)

Trailed subsoiler Registration Document

NAME:

ADDRESS:

Post Code

DATE:

SUMO SERIAL No.:
(Serial plate on chassis)

DEALERSHIP NAME AND BRANCH:

COMMENTS:

2.0 Summary

All machines feature a V shaped frame which lets soil and trash flow more efficiently, allowing the legs to be run closer together, giving total loosening.

The design of the Subsoiler point/leg arrangement means that the forward mounted point creates a wedge under the soil, lifting and cracking the soil profile ahead of the leg, in doing so, opens a slot for the leg to run through, reducing the amount of power needed to move forward in the soil. This aggressive action increases the aeration, leaving a surface 50 - 100 mm raised.
Before using the SUMO Trio it is absolutely necessary that you read this Operators manual and Safety Instructions attentively.

Specifications, descriptions and illustrations in this brochure are accurate, as known, at the time of publication but may be subject to change.

Contents

1.0 Registration……. 2

2.0 Summary……. 3

3.0 Safety…….. 5

3.1 Qualification and Training……... 5

3.2 General safety…….. 6

3.3 Special safety instructions…….. 6

4. 0 Maintenance…….. 7

4.1 Spares…… 7

4.2 Adjustments…….. 7

4.4 Replacement Parts …… 7

4.5 Winter Storage……. 8

5. 0 Parts and Assembly……..……... 9

5.1 Overview…… 9

5.2 Drawbar hitch…… 10

5.3 Drawbar hinge…….. 11

5.4 Front depth wheels…….. 12

5.5 Axle, Wheels and Brakes …… 13

5.6 Packer Depth ……..…. 14

5.7 Main Frame and Wings …… 15

5.8 Lights …… 17

5.9 Leg and point Assembly …….. 18

5.10 Auto reset socket assembly…… 19

5.11 Packer, scrapers and bearings ……..… 20

5.12 Stickers and Paint ……... 21

6.0 Hydraulics…..……..……..... 22

6.1 Drawbar ……... 22

6.2 Wings open/close circuit ……..…….. 23-24

6.3 Auto reset circuit…….. 25

3.0 Safety

This manual contains basic advice, which should be observed during setting-up, operation and maintenance. Therefore, this operating manual must be read by the personnel concerned prior to starting up and using the machine and be available at all times.

If safety instructions are not complied with, then this can lead to the risk of injury to yourself and others as well as damage to the environment or the machine. Non-compliance to the safety instructions can also lead to claims for damages becoming invalid.

3.1 Qualification and Training

- Reliable personnel may only perform any work on, or, with the machine. Statutory minimum age limits must be observed.
- Employ only trained or instructed staff; the individual responsibilities of the personnel concerning operation, setting up, maintenance and repair must be clearly established.
- Make sure that only authorized personnel work on or with the machine.
- Define the machine operators' responsibilities – also with regard to observing traffic regulations. The operator must have the authority to refuse any instructions issued by third parties, which contravene safety.
- Persons undergoing training or instruction or taking part in a general training course should not be allowed to work on or with the machine unless they are under the constant supervision of an experienced person.
- The use of spare parts, accessories and ancillary equipment not supplied and/or not approved by SUMO could have detrimental effects to the construction of the SUMO machine or on its functions and hence impair the active and/or passive driving and/or operational safety (accident prevention).
- SUMO shall not be responsible for any damage caused by the use of spare parts, accessories and ancillary equipment not supplied and/or approved by SUMO.
- Conversions of or modifications to the machine may only be carried out after consultation with SUMO.

3.2 General safety

- Warning signs and other notices on the machine provide important information for the safe operation. Observing them will serve your safety.
- Before starting work, make yourself familiar with all the equipment and controls as well as their functions.
- The user should wear close-fitting clothing.
- Keep the machine and in particular the bearings clean to avoid risk of fire.
- Check around the machine before moving off or starting up (watch out for children!). Make sure you have adequate all-round visibility.
- Always match your speed to the local conditions. Avoid sudden turning manoeuvres when driving uphill or downhill or when travelling across a slope.
- Observe the respective regulations when using public roads.
- Take into account the length, the wide overhang, the folded height and the sideways force acting on the machine when turning or negotiating curves.

3.3 Special safety instructions

- Take extreme care when hitching up or unhitching machine to/from the tractor.
- Never allow persons to stand between the tractor and the SUMO machine unless the tractor is secured against rolling away by means of parking brake and/or wheel chocks.
- It is forbidden to allow persons to ride on the machine at any time. A safe distance should be maintained from the machine by observers when in work.
- Never stand or work beneath suspended loads. Ensure rams are locked out before commencing maintenance work.
- Ensure all persons are stood clear of the machine when folding or unfolding.
- When making adjustments to the machine the tractor engine should be switched off to prevent the hydraulics from operating.
- When making adjustments to the machines care should be taken not to trap any body parts in moving or pivoting parts.

4. 0 Maintenance

The packer bearings should be greased with one pump once a week and after washing off.

Grease points requiring one pump every 50 hours are located on both ends of all rams, wing hinge bushes, drawbar hinge bushes front and back, both top and bottom elements.

Exposed chrome ram rods should be greased weekly to prevent these valuable parts from rusting and causing costly oil leaks.

Wheel studs should be checked that they tight after the first 10hrs operation and again regularly every week when in use.

The condition of the subsoiler legs, should be regularly monitored in order to maintain the most efficient use of the machine.

The condition and position of the packer scrapers should also be observed in order to prevent soil building up on the packer. Ensure the scrapers are not touching the packer though, as this will add rolling resistance as well as causing premature wear of the packer.

4.1 Spares

When ordering parts please have your serial number and part numbers ready.

4.2 Adjustments

Depth adjustment of the subsoiler legs is achieved by altering the height at which the packer is set with the pins, the front depth wheels with the pins and by removing or adding slices to the drawbar ram. The machines wings should always remain level when working.

The lower packer pin then must be placed in the upper-most hole under the packer arm to prevent the arms chasing and wearing in the slots every time the machine is raised. Failure to do this can result in excessive wear to the packer arms, main side plates and the quadrants.

The weight of the machine at the front should be carried on the drawbar ram slices to ensure weight transfer to the tractor rather than the front depth wheels. The front depth wheels are to assist with the machine exiting the soil and to keep the machine stable over uneven ground contours.

4.3 Auto-Reset Legs

The pressure in the hydraulic circuit controlling the auto-reset Subsoiler legs can be altered depending on circumstances and preference. The higher the hydraulic pressure, the more resistance the legs have to tripping.

To increase the pressure the correct procedure will be as follows:

1. Open the taps near the depth wheel rams (both wings).
2. Raise the machine using the drawbar ram.
3. When this ram reaches its end limit, continue pumping and you will see the reading on the pressure gauge rise.
4. Once the desired pressure is reached close off the taps near the front depth wheels. This locks the pressure in the system.
5. The machine can then be lowered for transport or work.

4.3 Replacement Parts

Points are replaced quickly and simply by removing the single M16 bolt located at the heal of the leg before sliding the old point off. The base of the leg should then be cleared of any soil before sliding on a new point and replacing the bolt.

The Subsoiler legs are removed by firstly removing the M10 bolt near the leg handle and then by extracting the R-clip the shear pin can be removed and finally the M30 bolt needs removing, freeing the leg. Care should be taken as to not trap any fingers during this procedure. The leg may then be taken out of the front of the socket. A new leg may be installed by reversing this procedure.

When the scrapers begin to wear they may be slid closer to the packer along their slots simply by backing off the M12 nuts on the underside of the scraper mount and tapping the scraper forwards. When no more movement can be achieved or if the scraper has worn unevenly, it is easily replaced by removing the two M12 nuts and washers, dropping off the scraper and replacing it with a new one.

4.4 Winter storage

When machines are to be parked up for the winter period, correct storage techniques are an important part of protecting the machine to ensuring a hassle free season. When the machine has finished work it should be cleaned down and washed off to remove all traces of soil.

Following washing of the packer bearings should be greased with one pump. Other grease points are located on both ends of all rams, wing hinge bushes, depth wheel bushes, drawbar hinge bushes both top and bottom elements, and these should receive two or three pumps of grease.

Wheel studs should be checked that they are tight. Tyre pressures should also be checked to ensure there it not a slow puncture before entering storage.

Exposed chrome ram rods should be greased to prevent these valuable parts from rusting over winter and causing costly oil leaks.

When the machine is parked up a note should be made of what wearing parts require replacing ready for the next seasons work. The wearing parts can then be ordered in time ready for the next season’s work in good time to avoid delays when the machine is required earlier than expected!

5.0 Parts and Assembly

5.1 Overview

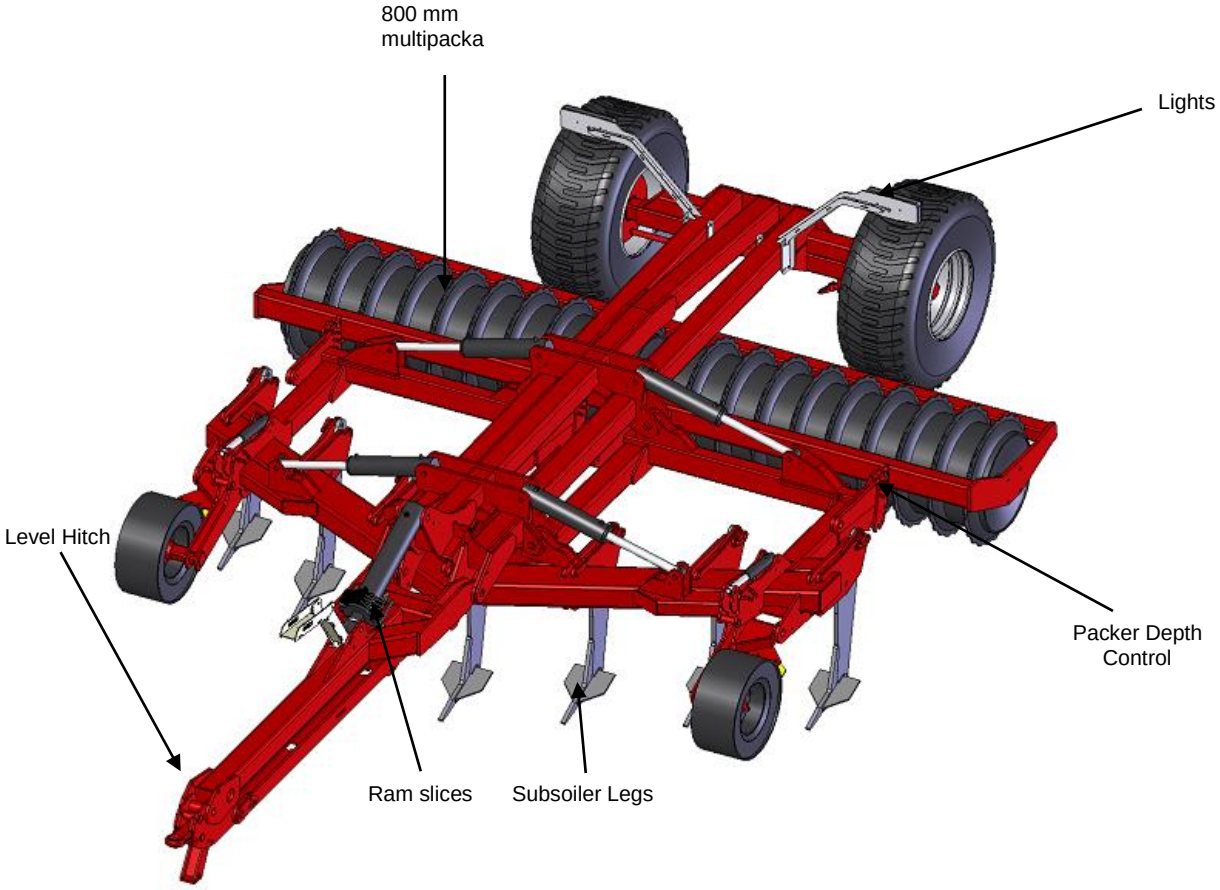

5.2 Drawbar hitch

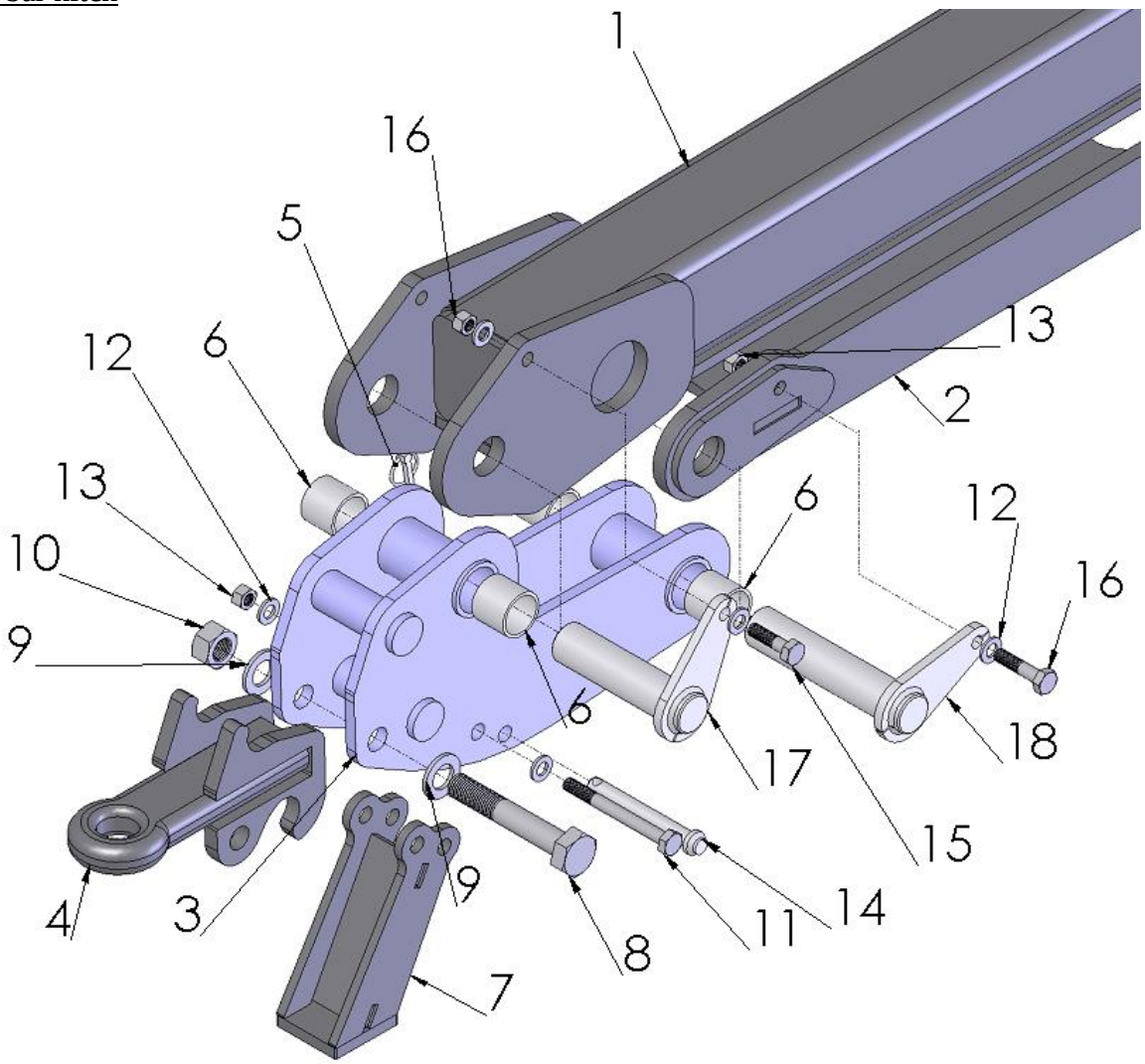

Item	Part No.	Description	Quantity/machine
1	SW417	Drawbar box	1
2	SW416	Lower parallel link	1
3	SW134	Drawbar hitch unit	1
4	SW135	Towing eye	1
5	SWB105	Linch pin	1
6	SWB108	50x58x50 PB1 bush	4
7	SW136	Stand	1
8	SWM30180	M30 x 180 bolt	1
9	SWM30001	M30 flat washer	2
10	SWM30004	M30 nylock nut	1
11	SWM16160	M16 x 160 bolt	1
12	SWM16001	M16 flat washer	6
13	SWM16004	M16 nylock nut	3
14	SW137	20mm straight stand pin	1
15	SWM1660	M16 x 60 bolt	1
16	SWM1670	M16 x 70 bolt	1
17	SW138	50 x 180 tabbed pin	1
18	SW139	50 x 224 tabbed pin	1

5.3 Drawbar hinge

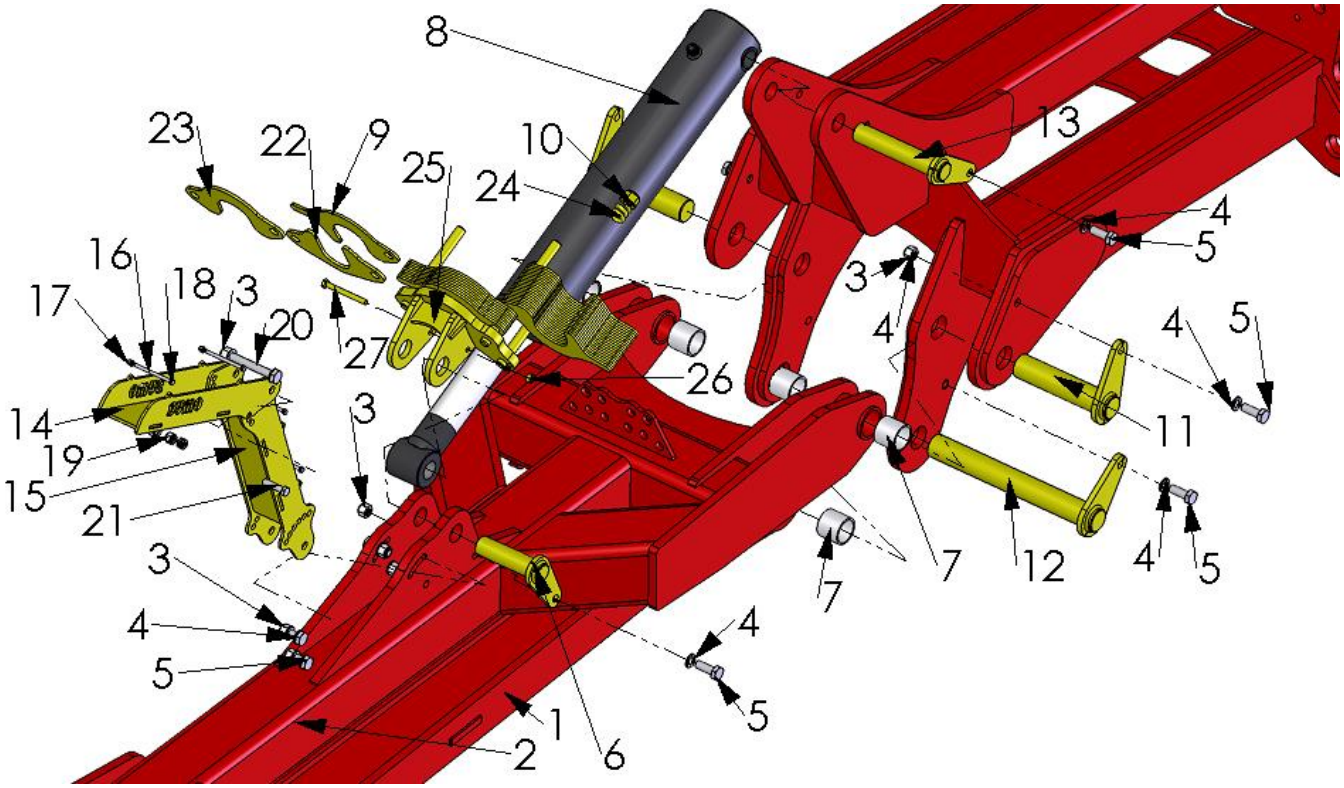

Item	Part No.	Description	Quantity/machine
1	SW539	Lower link	1
2	SW540	Drawbar box	1
3	SWM16004	M16 nylock nut	10
4	SWM16001	M16 flat washer	20
5	SWM1655	M16 x 55 bolt	9
6	SW143	40 x 148 tabbed pin	1
7	SWB142	50 x 58 x 50 Oilite bush	6
8	SWH293	780.120 ram	1
9	SW144	Ram slice	30
10	SWM20004	M20 nylock nut	1
11	SW139	50 x 225 tabbed pin	2
12	SW141	50 x 402 tabbed pin	1
13	SW142	40 x 210 tabbed pin	1
14	SW379	2007 pipe holder top section	1
15	SW380	2007 pipe holder lower section	1
16	SWM6130	M6 x 130 mm bolt	4
17	SWM6004	M6 nylock nut	4
18	SWM6001	M6 flat washer	8
19	SWM12004	M12 nylock nut	2
20	SWM16130	M16x130 bolt	1
21	SWM1250	M12x50 bolt	2
22	SW533	Drawbar ram slice under ram	1
23	SW534	Drawbar ram seal guard	1
24	SW535	Drawbar slice spring	1
25	SW536	Drawbar ram stop frame	1
26	SWM10004	M10 nylock nut	1
27	SWM10140	M10 x 140	1

5.4 Front depth wheels

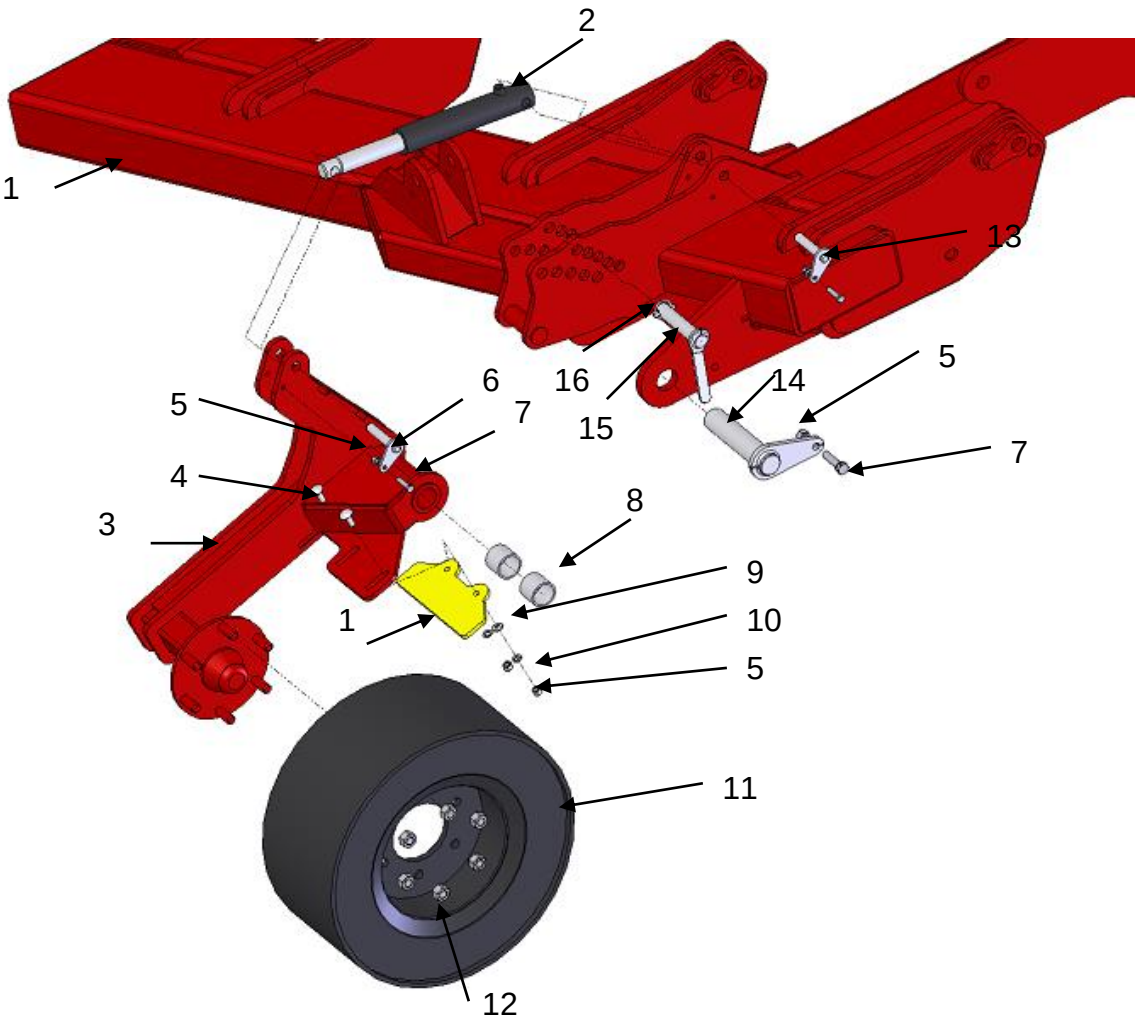

Item	Part No.	Description	Quantity/ 7 leg machine
1	SW503	RH trailed 7 leg subsoiler wing	1
	SW504	LH trailed 7 leg subsoiler wing	1
2	SWH276	640/2 ram	2
3	SW505	RH depth wheel arm	1
	SW506	LH depth wheel arm	1
4	SWM1235 chsq	M12x35 cup head square bolt	4
5	SWM1204	M12 Nylon locknut	4
6	SW507	22 x 90 tabbed pin	2
7	SWM1250	M12 x 50 bolt	6
8	SWB142	50 x 58 x 50 Oilite bush	4
9	SWM12001	M12 flat washer	4
10	SWM12004	M12 spring washer	4
11	SW508	Front depth wheel	4
12	SW509	Front depth wheel nut	12
13	SW510	22 x 135 tabbed pin	2
14	SW511	50 x 332 tabbed pin	2
15	SW512	25 x 150 depth pin	2
16	SW105	Lynch pin	2

5.5 Axle, Wheels and Brakes

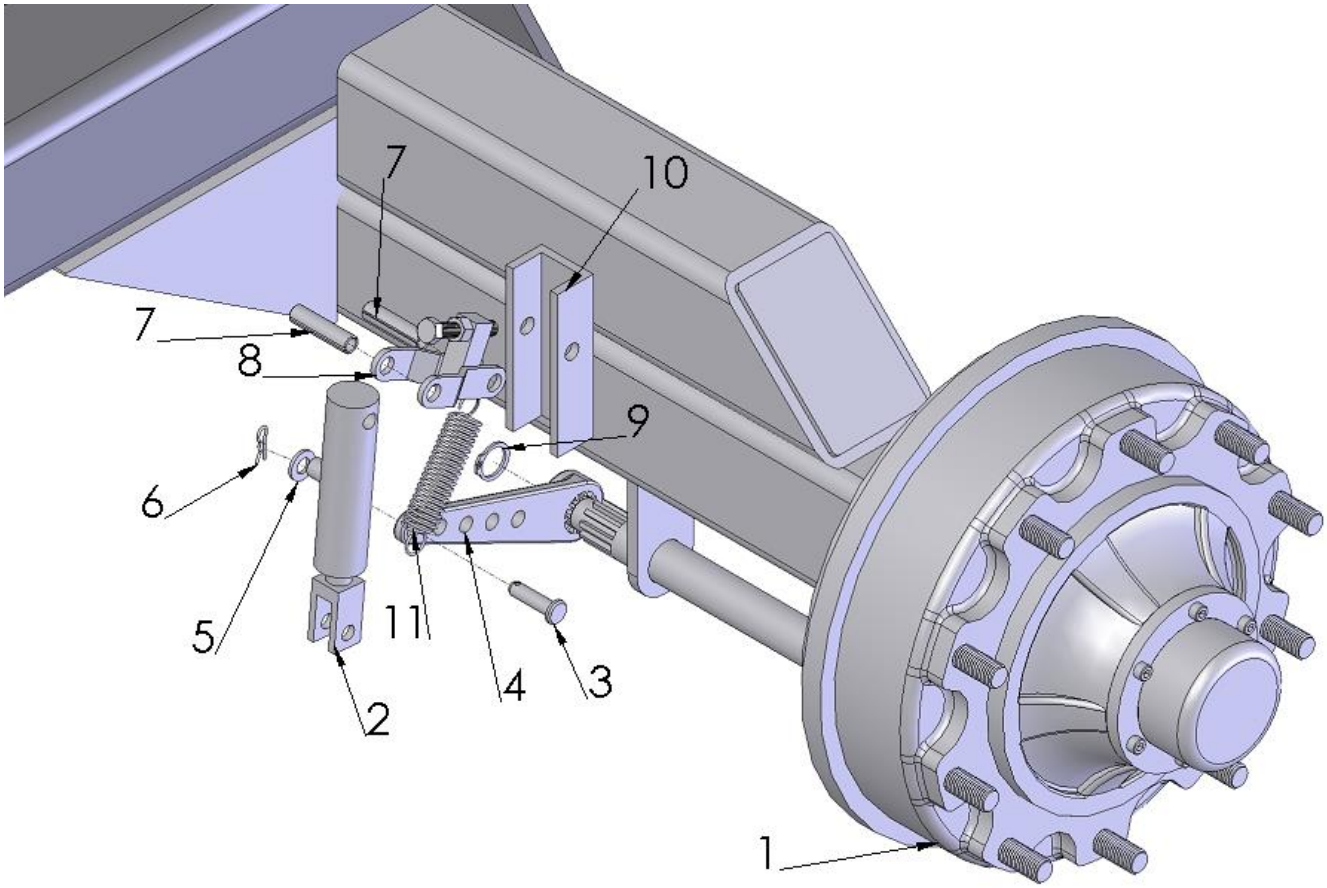

Item	Part No.	Description	Quantity/machine
1	SWB133	10 stud braked hub	2
2	SWB134	Brake ram	2
3		12mm clevis pin	2
4		Brake arm	2
5	SWM12001	M12 flat washer	2
6		Small R-clip	2
7		14x60 roll pin	4
8		Ram mount /adjuster	2
9		Circlip	2
10		Ram mount base	2
11		Spring and Clip	2

Fitted with 10 stud 600/60 22.5 transport wheels and tyres

5.6 Packer Depth

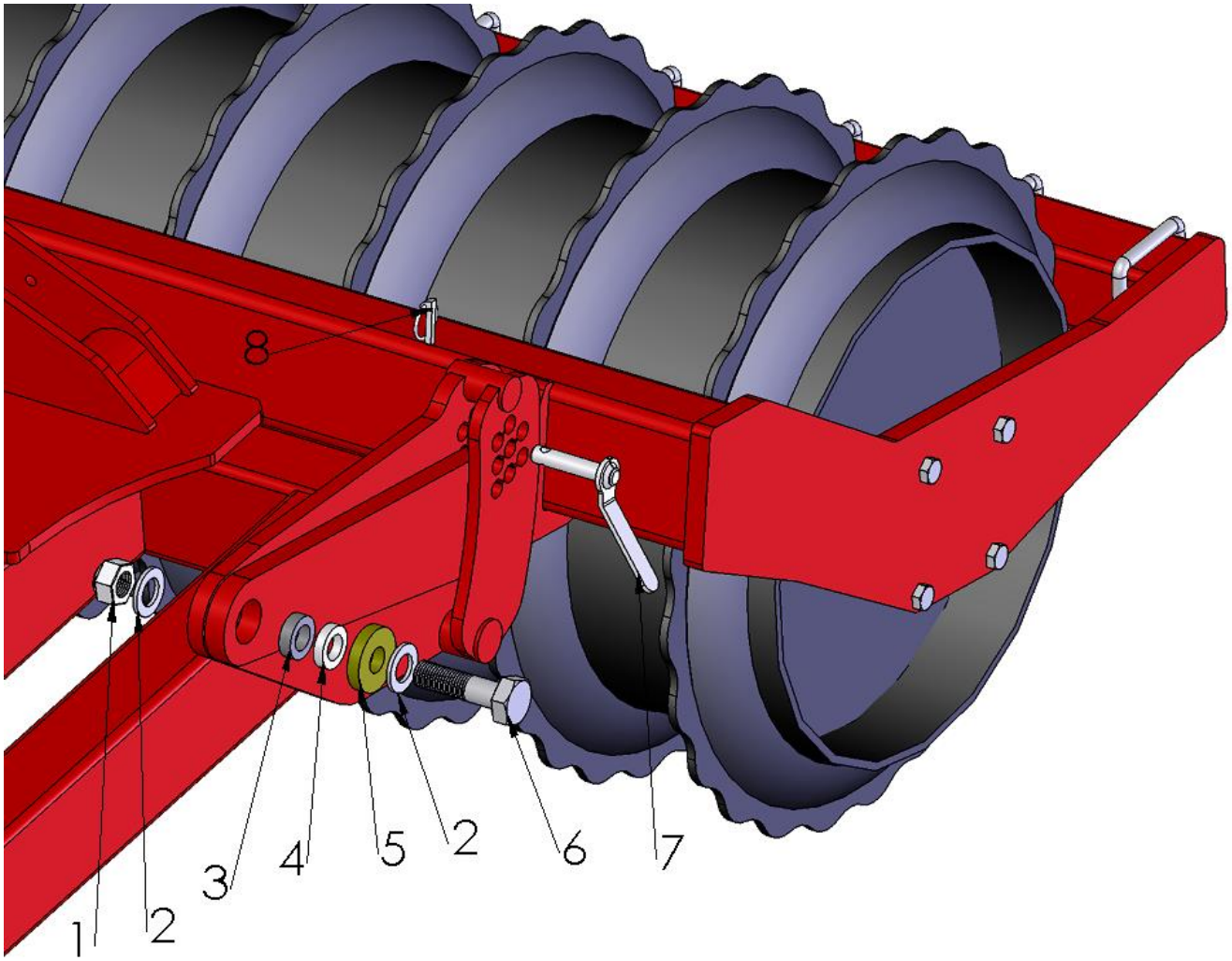

Item	Part No.	Description	Quantity/ machine
1	SWM30004	M30 Nylock nut	4
2	SWM30001	M30 washer	8
3	SW227	15mm packer arm bush	4
4	SW125	12mm packer arm bush	4
5	SW129	15mm x 75 outer washer	4
6	SWM30110	M30 x 110 bolt	4
7	SW130	Packer depth pin	4
8	SW105	Linch pin	4

5.7 Main Frame and Wings

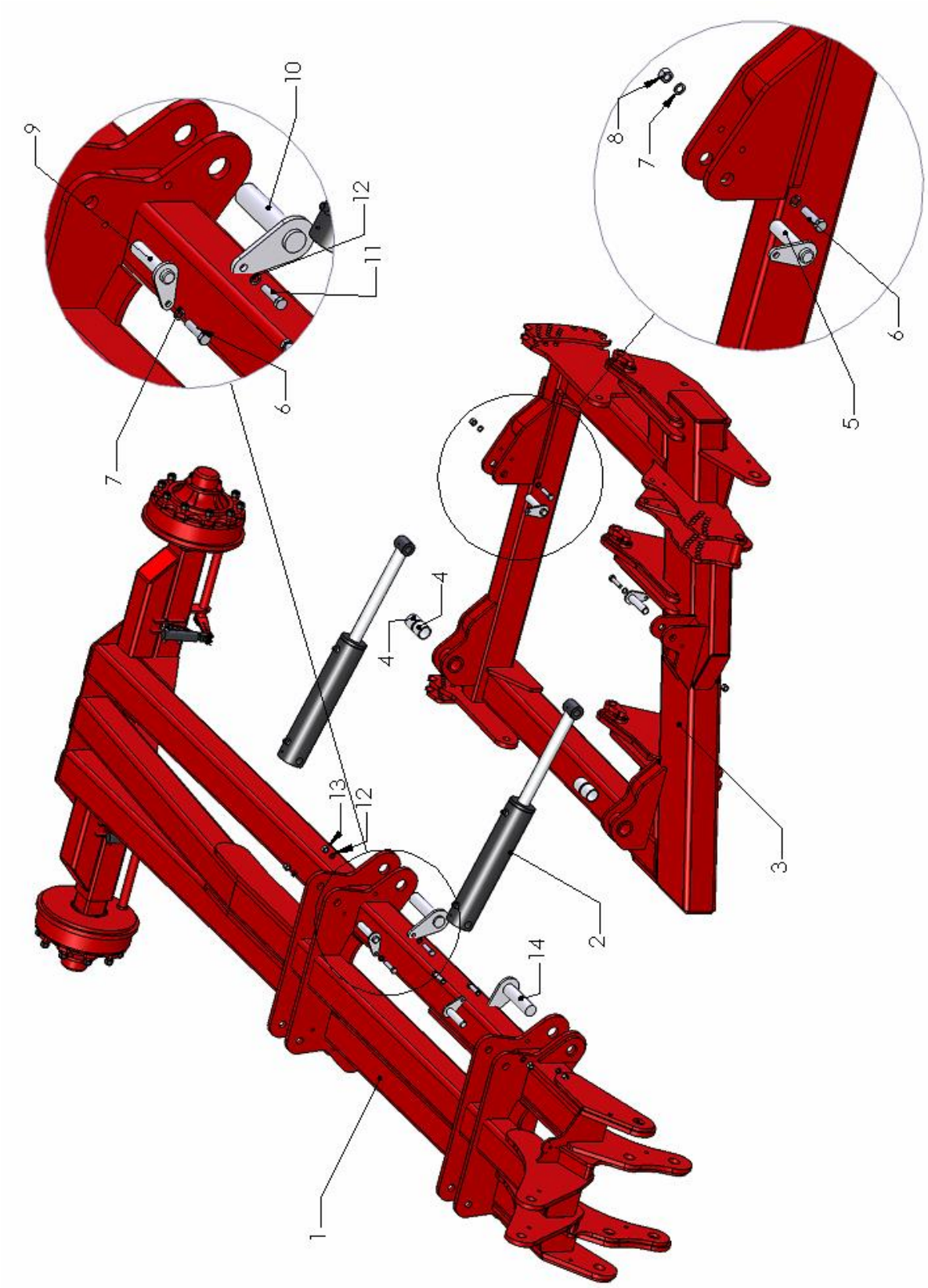

Item	Part No.	Description	Quantity/ 7 leg machine
1	SW439	Trailed subsoiler chassis	1
	SW694	A/R Trailed Subsoiler chassis (not shown)	1
2	SWH132	706/4 ram	4
3	SW513	Trailed subsoiler RH wing frame	1
	SW514	Trailed subsoiler LH wing frame (not shown)	1
	SW692	A/R Trailed subsoiler RH wing frame (not shown)	1
	SW693	A/R Trailed subsoiler LH wing frame (not shown)	1
4	SW142	50 x 58 x 50 Oilite bush	8
5	SW441	115 x 30 Tabbed pin TT	2
6	SWM1250	M12x50 bolt	4
7	SWM12001	M12 flat washer	8
8	SWM12004	M12 nylock nut	4
9	SW440	175 x 30 Tabbed pin TT	2
10	SW442	175 x 50 Tabbed pin TT	1
11	SWM1660	M16x60 bolt	2
12	SWM16001	M16 flat washer	4
13	SWM16004	M16 nylock nut	2
14	SW443	190 x 50 Tabbed pin TT	1

5.8 Lights

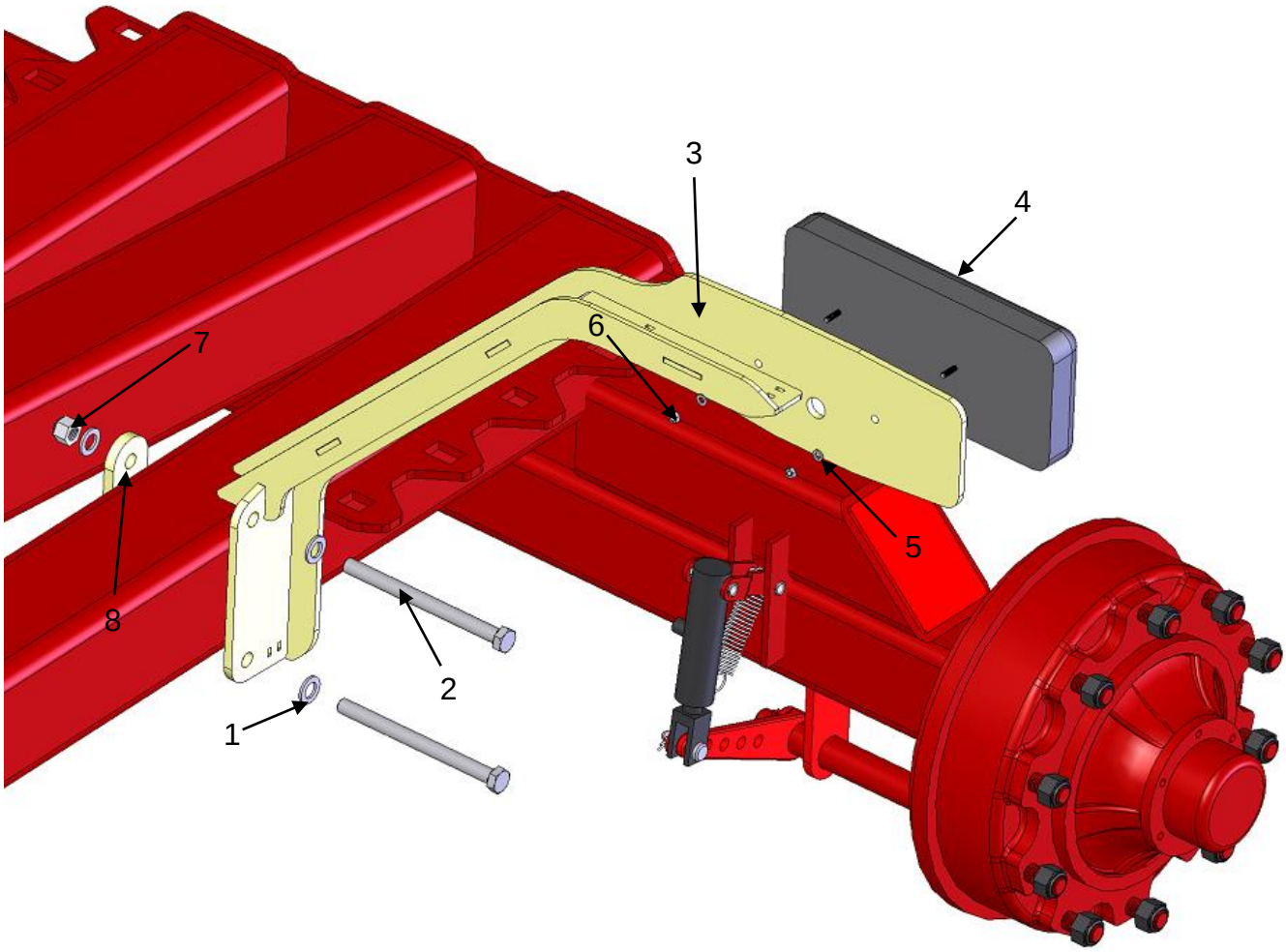

Item	Part No.	Description	Quantity/ machine
1	SWM16001	M16 flat washer	8
2	SWM16200	M16 x 200 bolt	4
3	SW444	Light bracket left	1
	SW445	Light bracket right (not shown)	1
4	SWB165	Rubberlite rear light (complete)	2
5	SWM8001	M8 flat washer	4
6	SWM8003	M8 plain nut	4
7	SWM16004	M16 nylock nut	4
8	SW446	Light bracket clamp plate	2

5.9 Leg and point assembly

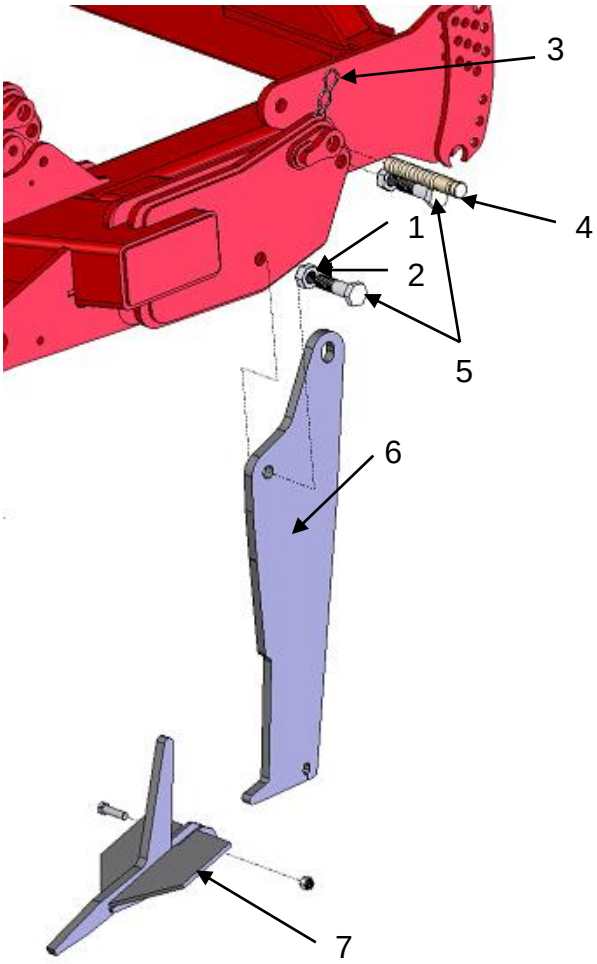

Item	Part No.	Description	Quantity/ leg	Quantity/ 7 leg machine
1	SWM30004	M30 nylock nut	2	14
2	SWM30001	M30 flat washer	4	28
3	SWB106	Pin retainer Clip	1	7
4	SW193	2007 subsoiler shear pin	1	7
5	SWM30110	M30x110 bolt	2	14
6	SW191	2007 subsoiler leg	1	7
7	SW194	2007 subsoiler point c/w M16 nut and bolt	1	7

5.10 Auto reset socket assembly

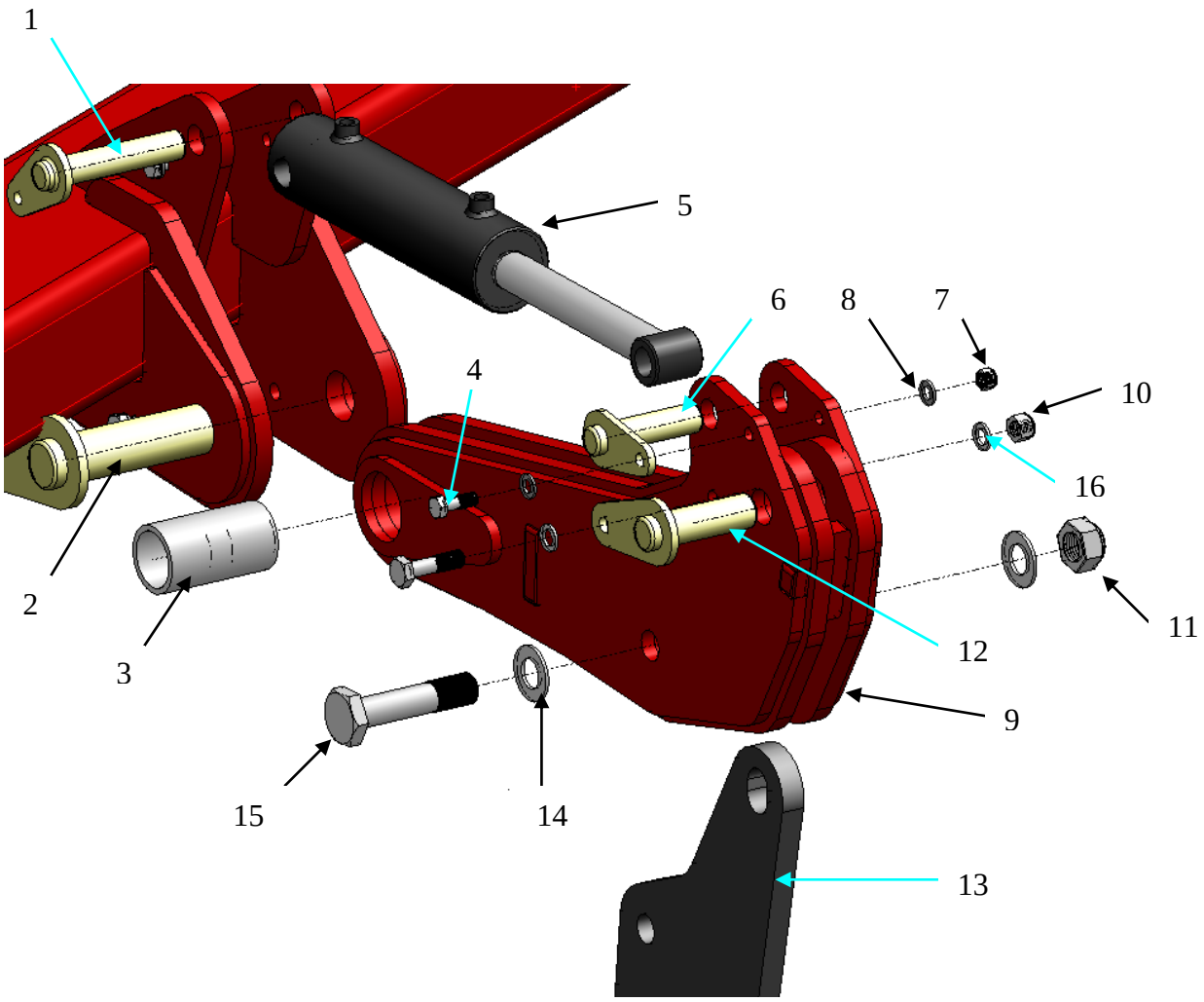

Item	Part No.	Description	Quantity/7leg machine
1	SW395	30 x 165 Tabbed Pin	7
2	SW396	50 x 230 Tabbed Pin	7
3	SW397	Front pivot bush	7
4	SWM1240	M12x40 bolt	14
5	SWH125	705/2 ram	7
6	SW398	30 x 125 Tabbed Pin	7
7	SWM12004	M12 nylock nut	14
8	SWM12001	M12 flat washer	28
9	SW399	Radius Arm	7
10	SWM16004	M16 nylock nut	14
11	SWM30004	M30 nylock nut	7
12	SW400	35 x 125 Tabbed Pin	7
13	SW191	Subsoiler leg	7
14	SWM30001	M30 flat washer	14
15	SWM30140	M30x140 bolt	7
16	SWM16001	M16 flat washer	28
17	SWM1665	M16x65 bolt	14

5.11 Packer, scrapers and bearings

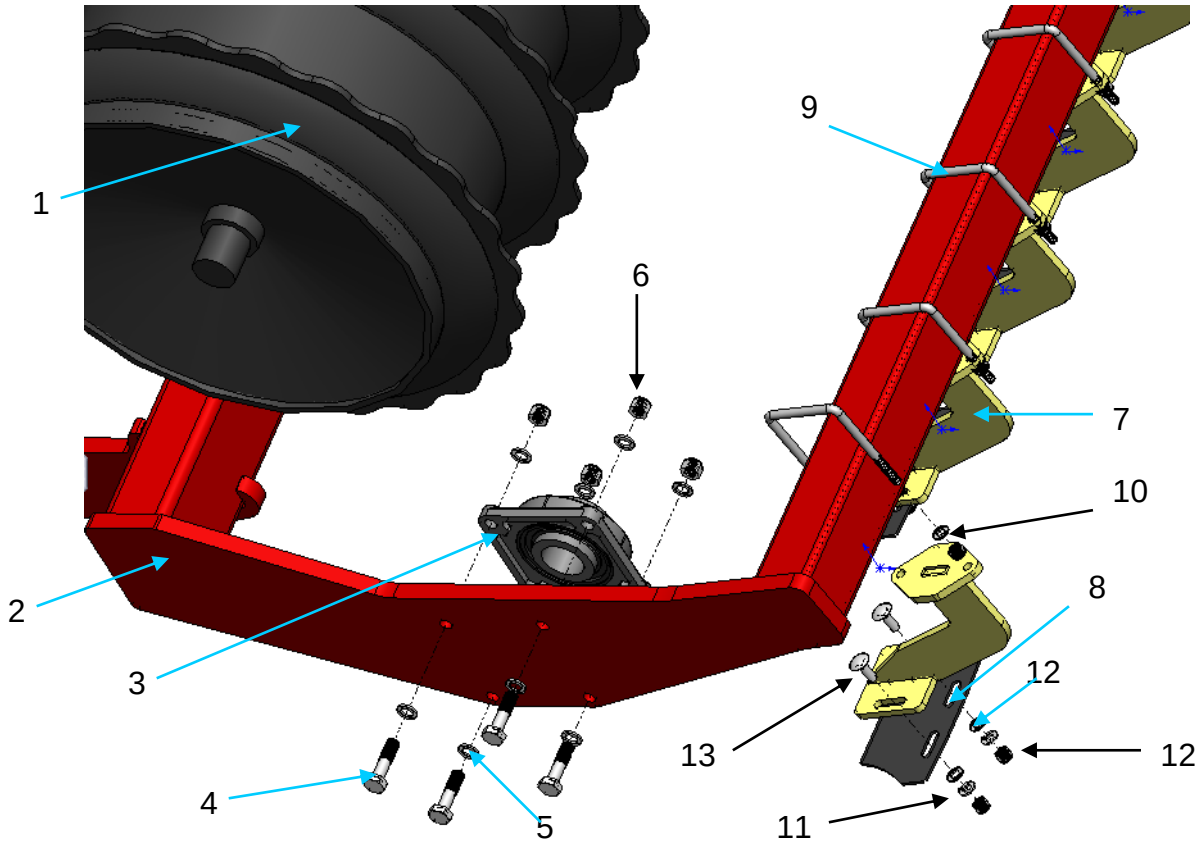

Item	Part No.	Description	Quantity/ 7 leg machine
1	SW515	2.3m multi packer	2
2	SW516	Right hand packer frame	1
	SW517	Left hand packer frame (not shown)	1
3	SWB104	TMSF60 bearing	4
4	SWM1670	M16 x 70 bolt	16
5	SWM16001	M16 flat washer	32
6	SWM16004	M16 nylock nut	16
7	SW 650	2009 scraper mount	22
8	SW651	2009 full scraper plate	22
9	SWM12100ub	M12x100 U-bolt	22
10	SWM12001	M12 flat washer	88
11	SWM12002	M12 spring washer	22
12	SWM12004	M12 nylock nut	88
13	SWM1235chsq	M12x35 cup head square bolt	44

5.12 Stickers and Paint

Sticker	Description	Quantity	Part No.
	Big Sumo horizontal sticker 450 x 125mm	9	SWB125
	Big Union Jack sticker 150 x 100mm	2	SWB127
Touch up paint	Sumo Red	1/2 litre	SWB131
	Sumo Black	1/2 litre	SWB132

6.0 Hydraulics

6.1 Drawbar

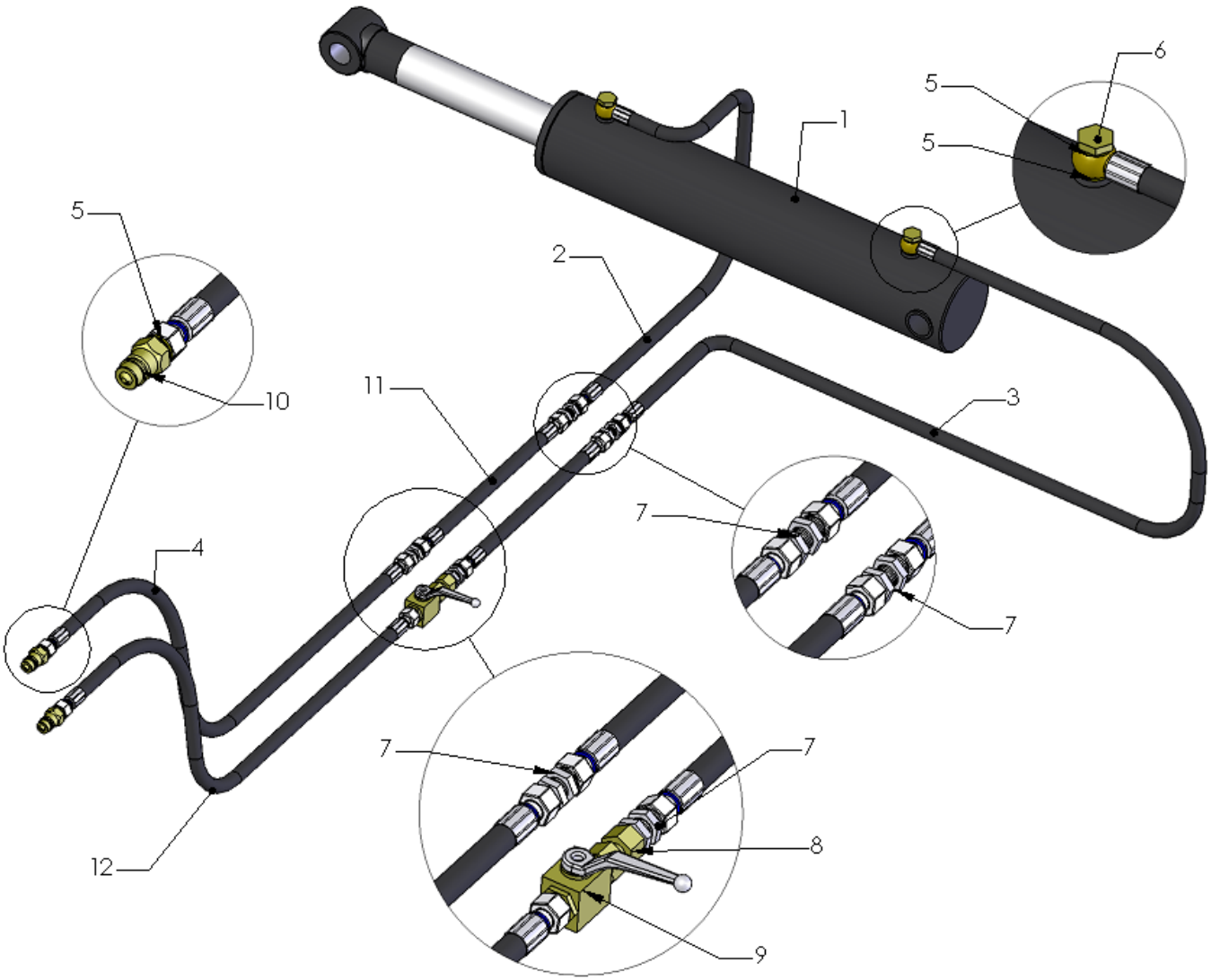

Item	Part No.	Description	Quantity
1	SWH136	707/5 Ram	1
2	SWH226	1/2" Hyd hose bottom ram to bulk head	1
3	SWH227	1/2" Hyd hose top ram to bulk head	1
4	SWH224	1/2" Hyd hose bulk head to spools (3500mm)	1
5	SWH142	1/2" dowty washer	6
6	SWH143	1/2" banjo bolt	2
7	SWH144	15L bulk head fitting	4
8	SWH171	15L female to female fitting	1
9	SWH145	15L tap	1
10	SWH147	Male quick coupler	2
11	SWH225	1/2'' Hyd Hose Bulk head to bulk head	2
12	SWH219	1/2" Hyd hose bulk head to spools (3400 mm)	1

6.2 Wings open/close circuit

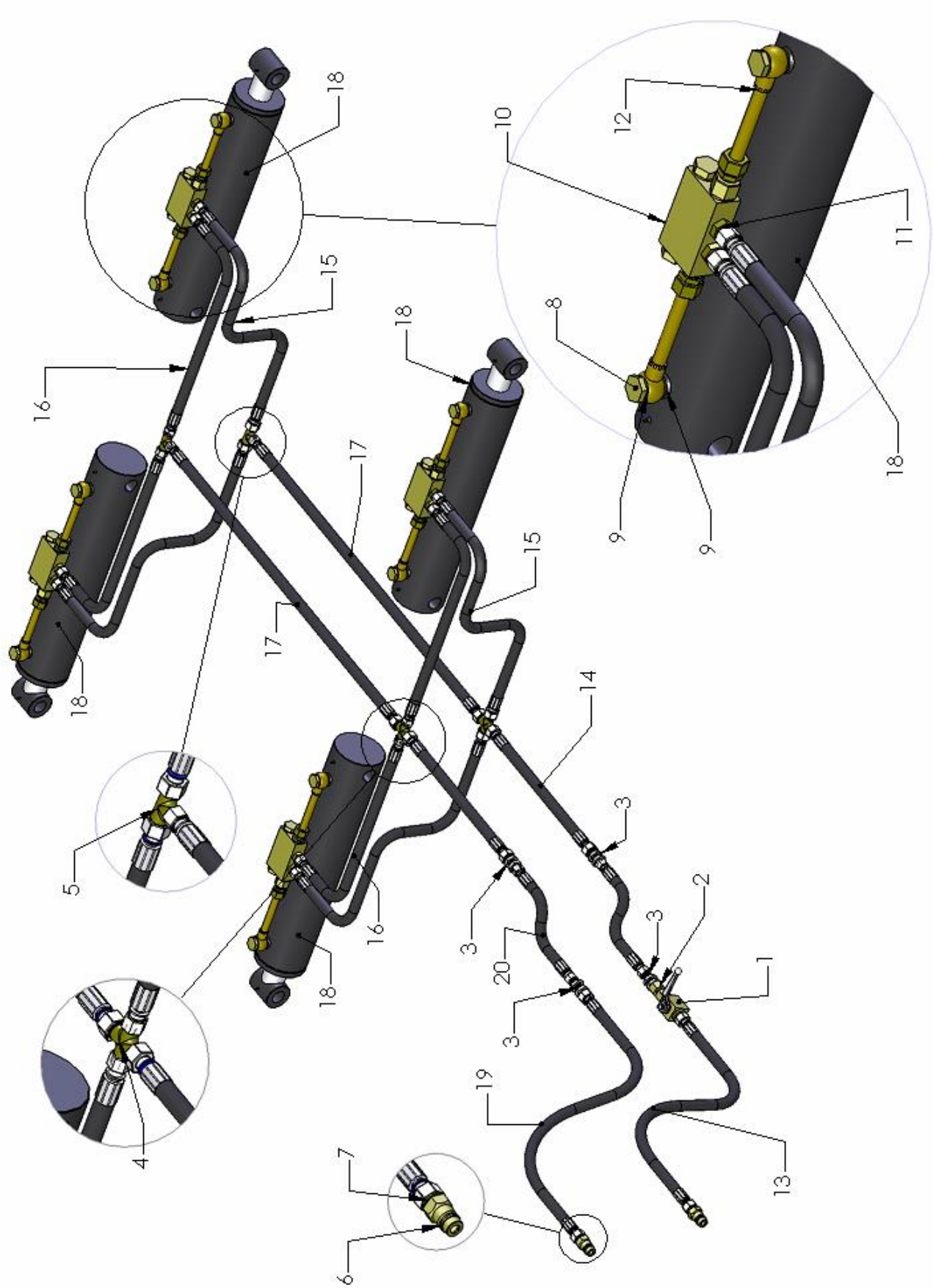

Item	Part No.	Description	Quantity
1	SWH145	15L tap	1
2	SWH171	15L female to female fitting	1
3	SWH144	15L bulk head fitting	2
4	SWH155	12L cross	2
5	SWH156	12L Tee	2
6	SWH147	Male quick coupler	2
7	SWH142	1/2'' dowty washer	2
8	SWH143	1/2'' banjo bolt	8
9	SWH169	3/8" dowty washer	16
10	SWH154	Pilot operated check valve	4
11	SWH157	12L - 3/8" M fitting	8
12	SWH229	15L 1/2'' banjo pipe	8
13	SWH230	3/8" Hyd hose bulk head to spools (3400 mm)	1
14	SWH220	3/8" Hyd hose bulk head to front cross (720mm)	2
15	SWH221	3/8" Hyd hose supply to far port	4
16	SWH222	3/8" Hyd hose supply to near port	4
17	SWH223	3/8" Hyd hose front cross to end	2
18	SWH132	706/4 ram	4
19	SWH231	3/8" Hyd hose bulk head to spools (3500mm)	1
20	SWH244	3/8" Hyd hose bulk head to bulk head	2

6.3 Auto reset hydraulic circuit

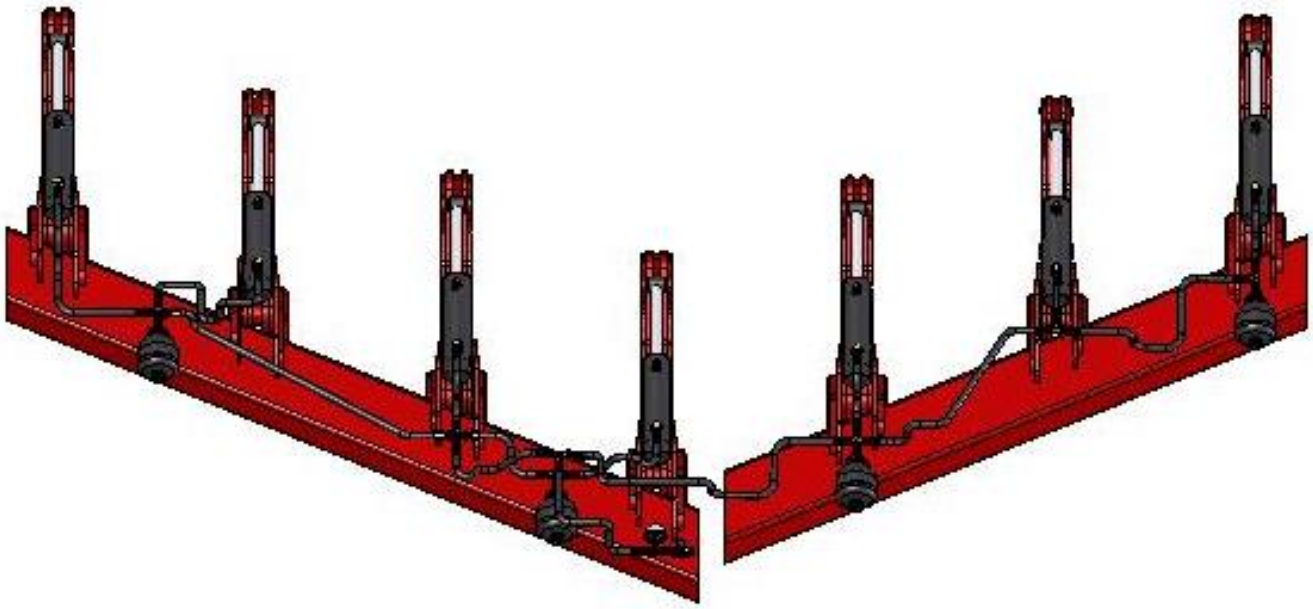

Item	Part No.	Description	Quantity/7 leg machine
1	SWH125	705/2 ram	7
2	SWH185	3/8" Hyd hose 400 banjo-12Lsw90	1
3	SWH156	12L Tee branch	7
4	SWH169	3/8" dowty washer	2
5	SWH170	3/8" Banjo bolt	1
6	SWH184	Accumulator nut	4
7	SWH178	Accumulator	4
8	SWH180	Flow control valve	1
9	SWH198	3/8" Hyd hose 400 12Lf-12Lsw90	1
10	SWH142	1/2'' dowty washer	1
11	SWH147	Male quick coupler	1
12	SWH176	12L female to female fitting	1
13	SWH155	12L cross	1
14	SWH181	4000psi pressure gauge	1
15	SWH192	3/8" Hyd hose 400 12Lf-12Lsw90	5
16	SWH197	3/8" Hyd hose 450 12Lf-12Lf	2

6.4 Adjusting the Pressure in the Auto Reset circuit

With your machine, to increase the pressure the correct procedure will be as follows:

1. Open the taps near the depth wheel rams (both wings).
2. Raise the machine using the drawbar ram.
3. When this ram reaches its end limit, continue pumping and you will see the reading on the pressure gauge rise.
4. Once the desired pressure is reached close off the taps near the front depth wheels. This locks the pressure in the system.
5. The machine can then be lowered for transport or work.